Development of SRF Systems for an Electron-Ion Collider

Development of SRF Systems for an Electron-Ion Collider

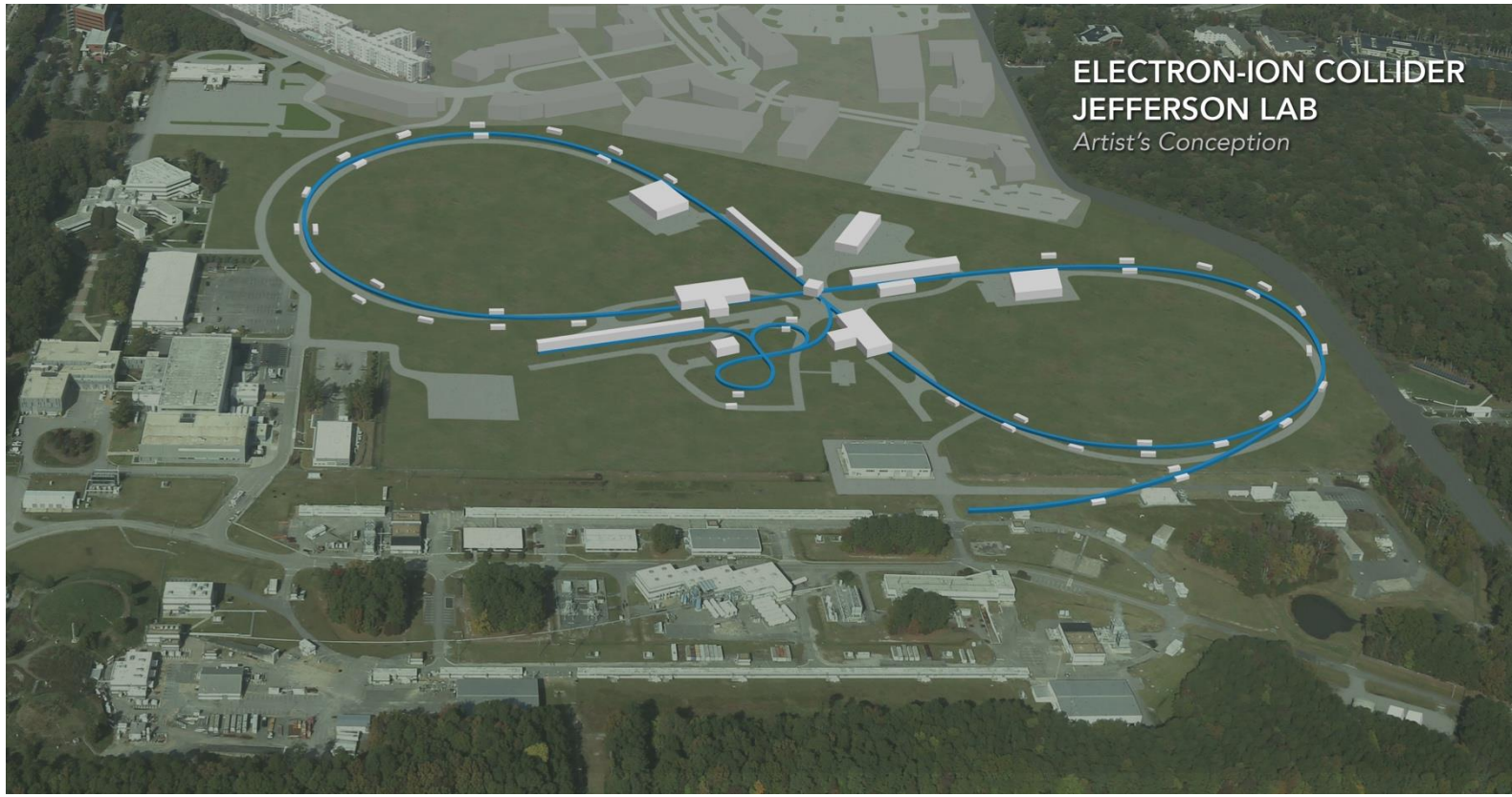

R. Rimmer

Jefferson Lab

U.S. DEPARTMENT OF ENERGY | Office of Science

JSA

Development of SRF Systems for an Electron-Ion Collider (PI: R. Rimmer)

- Description
  - Design and development of SRF systems for the ion collider ring, high energy electron cooler ERL and as back-up for the NCRF in the electron ring, at the new JLEIC collider design frequency of 952.6 MHz. These need to be compact, flexible, high efficiency, strongly HOM damped and cost efficient systems. Similar solutions are needed for eRHIC .
- Status
  - Complete
- Main goal
  - Finalize conceptual design of four cavity types (ion-ring, cooler booster/chirper, e-ring and cooler ERL). Fabricate first 952.6 MHz prototypes.
- Supported by JLab's DoE NP Accelerator base funding
- The project's funding is not continued by the FY'18 NP Accelerator R&D FOA. However, one collaboration funded FY'18 project "Strong Hadron Cooling"(PI S. Benson) will benefit from this project's results.

Development of SRF Systems for an Electron-Ion Collider

- Budget

	FY'17-FY'18	Totals
a) Funds allocated	$449,000	$449,000
b) Actual costs to date	$449,000	$449,000

- Deliverables and schedule

Task	FY'17 Q1	FY'17 Q2	FY'17 Q3	FY'17 Q4
Electromagnetic design and requirements for each of the four cavity types.				**X**
First prototype 952.6 MHz cavity for the cooler ERL				**x**

- The project connects to Line 2, "High-current single-pass ERL for hadron ring", and line 3, "Strong Hadron Cooling", both priority High-A of the Jones' Panel report

JLEIC requires many new RF systems

- E-ring based on PEP-II
- Cooler ERL injector, and harmonic kicker
- New Ion ring cavities
- New e-ring cavities (?)
- Cavity prototyping
- CRAB cavities (ODU)

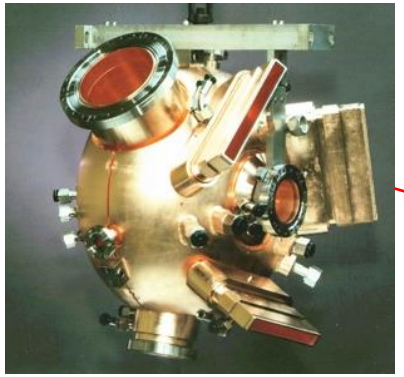

476.3 MHz e-ring
(NCRF PEP-II)

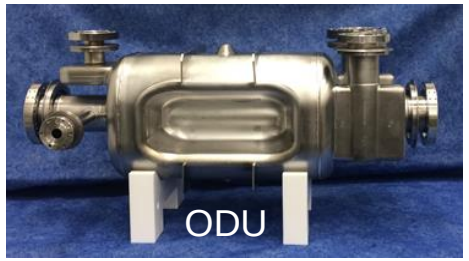

952.6 MHz crab
(SCRF)

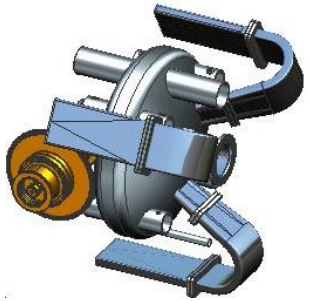

952.6 MHz e-ring
(SCRF)

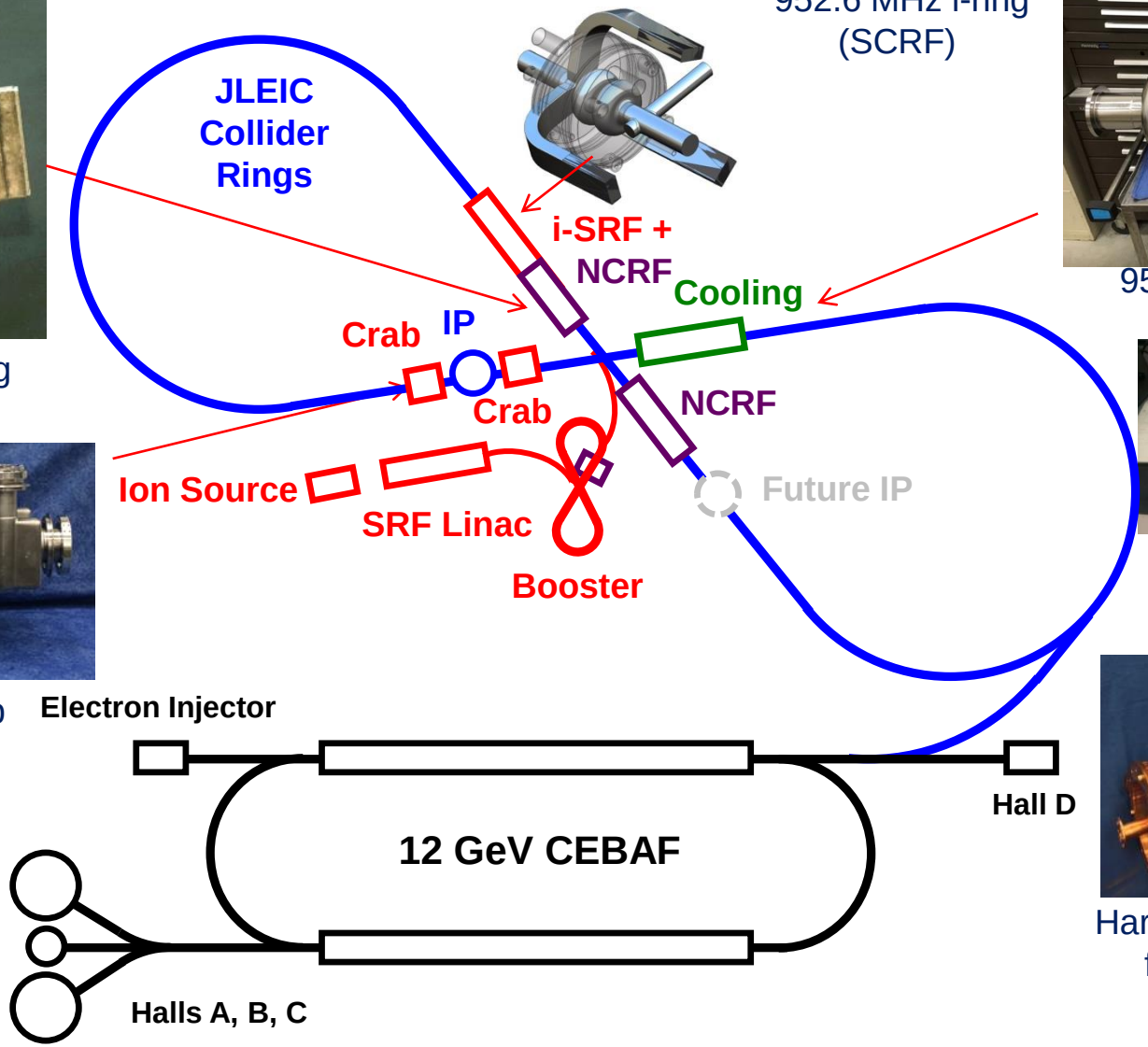

952.6 MHz i-ring
(SCRF)

952.6 MHz cooler
ERL (SCRF)

952.6 MHz booster
(SCRF)

Harmonic Fast kicker
for cooling ring

Statement of the problem to be solved

- JLEIC requires several new SRF systems at the new JLEIC collider design frequency of 952.6 MHz.
- These need to be compact, flexible, high efficiency, strongly HOM damped and cost efficient systems
- **Ion storage ring**
- **Cooler ERL**
- **Cooler booster**
- **Electron storage ring**
- Plus crab cavities being developed separately by ODU

New 952.6 MHz SRF Cavities

New 952.6MHz High-current cavity shape

- 4 different HOM damping schemes evaluated
- Focus on 3 waveguide damper design for ion ring
- Possibly on-cell damper for e-ring
- 1-cell prototype tested

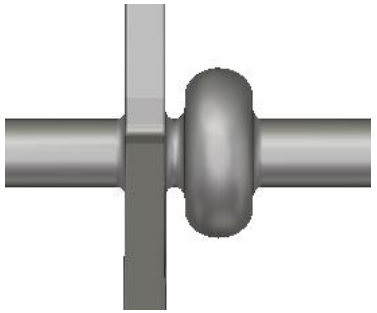

1) 3WG.

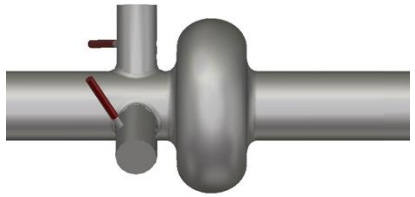

2) 3 coax dampers.

3) enlarged beam pipes

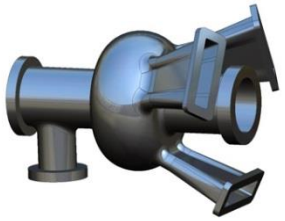

4) on-cell dampers

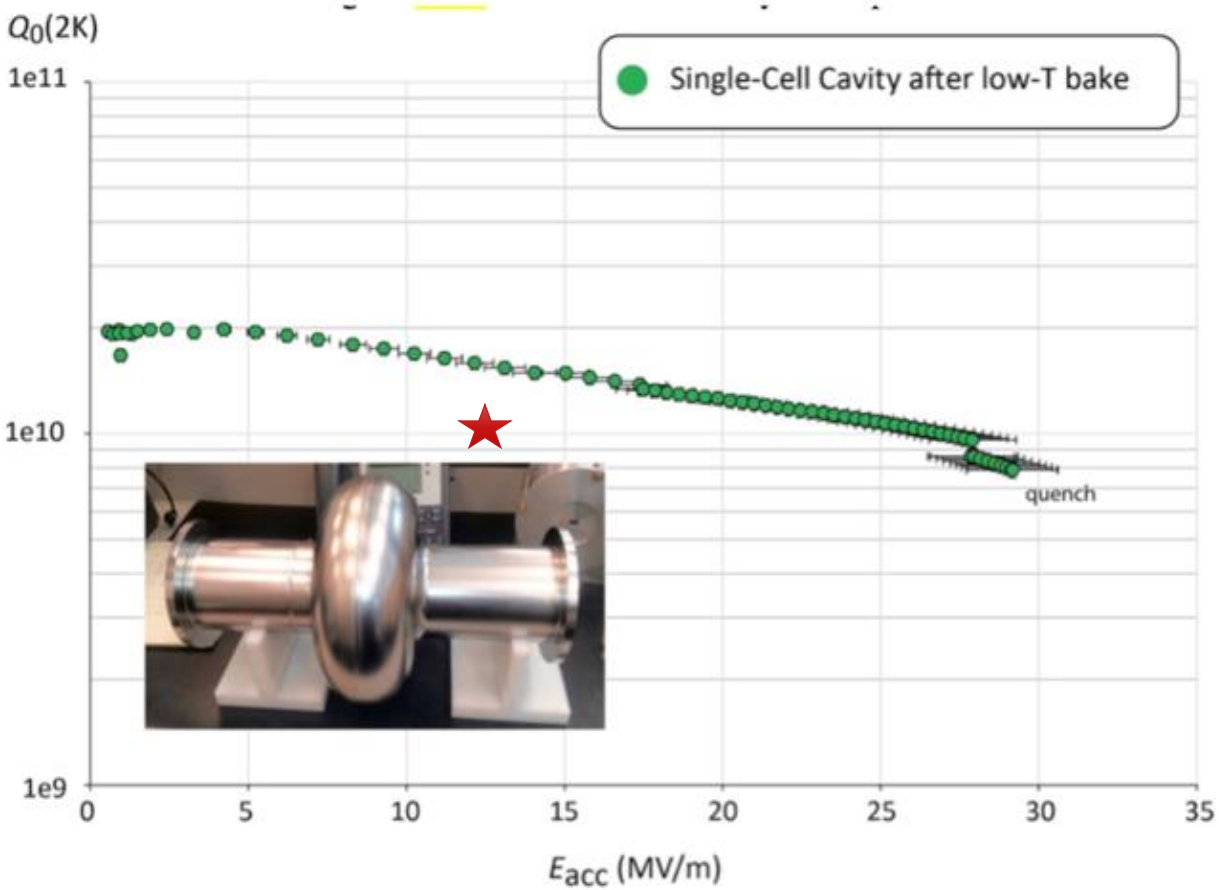

Two-cell WG damped SRF Cavity for JLEIC Ion Ring

F. Marhauser

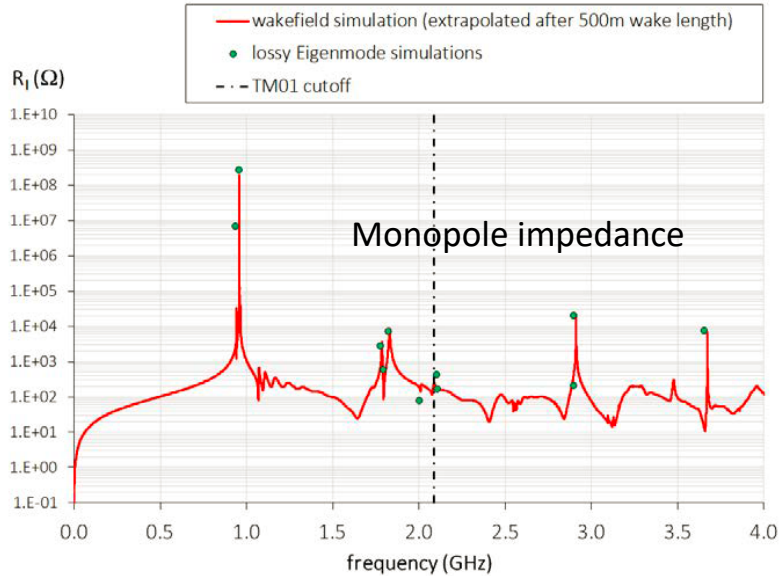

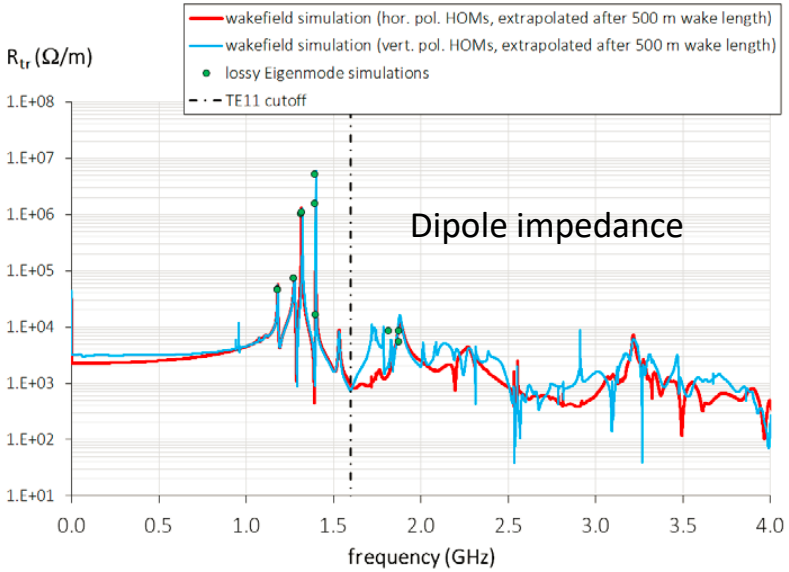

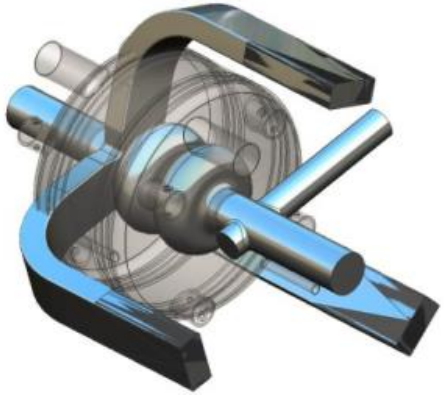

FPC

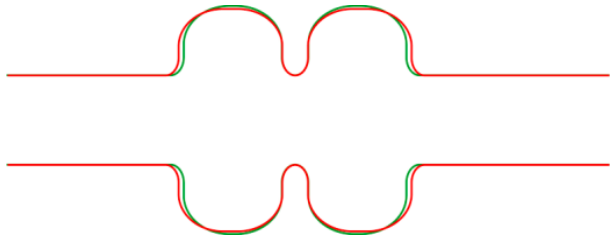

0 mode optimization

Baseline stable – see Rui Li's talk at collaboration meeting

In this ion ring cavity design iteration

1. 2-cell 952.6 MHz cavity with π mode R/Q=211Ω
2. Currently the coax FPC designed at ~10^6 Qext without intruding the coupler tip into the iris radius, but the desired Qext is 2.4×10^4 to 6×10^4 for transient beam loading correction. May need to step up the beampipe.
3. Desired Vc=2.4MV, cavity drive power **480 kW**. 24 cavities needed.
4. Impedance of the worst HOM offender about one order of magnitude better than 3-coax
5. TM010 0 mode R/Q=2.3Ω with Qext=2.98×10^6, which is most dangerous mode. Optimization to reduce the R/Q further not easy as the other HOM becomes stronger. However Qext can be reduced significantly if we reach our FPC Qext goal.

Jefferson Lab

Cooler ERL 5-cell cavity

- Evaluated coax and WG end groups
- Estimated HOM power for various fill patterns including gaps
- Worst case ~6 kW so prefer WG
- 5-cell bare prototype tested

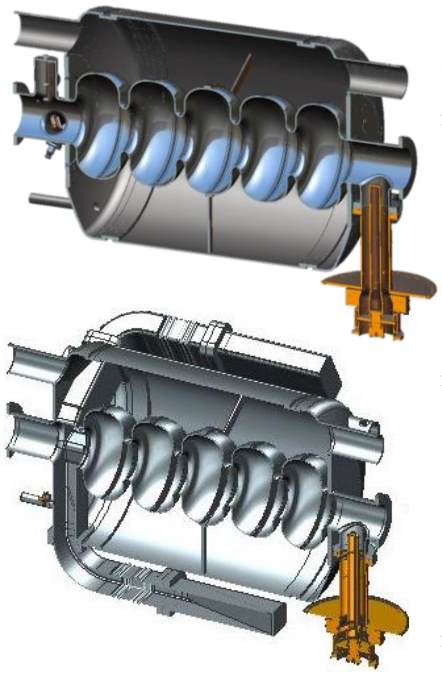

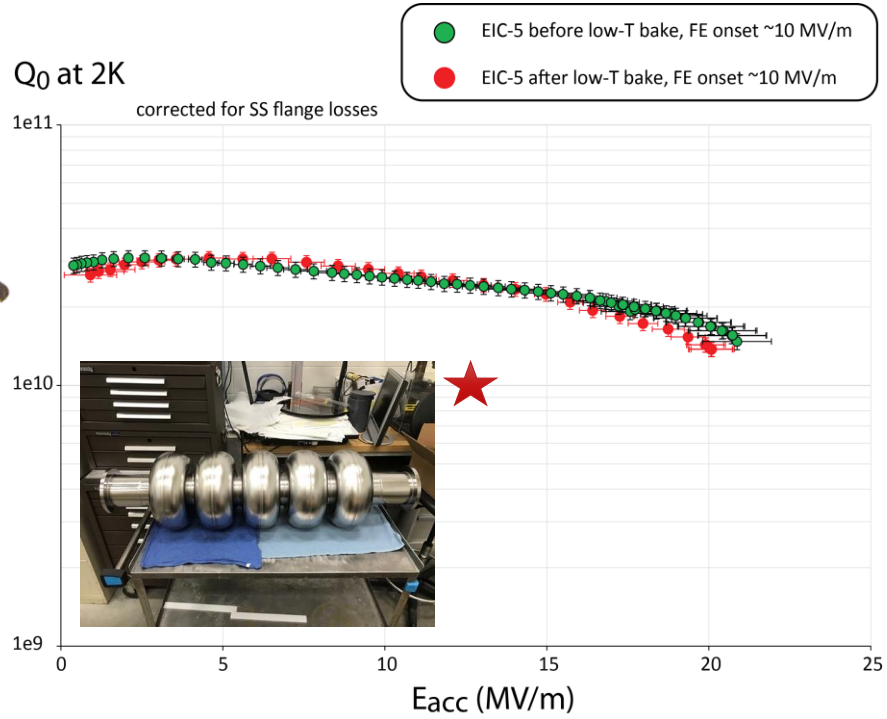

f_{RF} (MHz)	952.636			
Cooling bunch rate (MHz)	119.075	238.15	476.3	952.6
Gun laser rate (MHz)	10.825	21.65	43.3	86.6
bunch train repetition rate (MHz)	0.349	0.698	1.397	1.397
CCR circumference (m)	213.955			
ERL path length (m)	2573.32 ((8184-5.5)λ)			
Laser bucket pattern	7 on, 1 off, 7 on, 1 off, 7 on, 1 off, 6 on, 1 off	14 on, 2 off, 13 on, 2 off	27 on, 4 off	54 on, 8 off
Charge per bunch (nC)	3.2			
Average ERL injection current (mA)	30	60	120	241
HOM power per cavity (kW)	0.33	0.76	2.0	5.9
HOM power per cavity scaled to CCR current 1.5A (kW)	6.7	3.9	2.6	1.9

HE cooler ERL injector

F. Hannon

- Magnetized DC gun
- NC capture and buncher
- **SRF booster can use i-ring SRF cavities**
- High-current non energy recovered
- Several merger options under study
- 476 MHz option under consideration

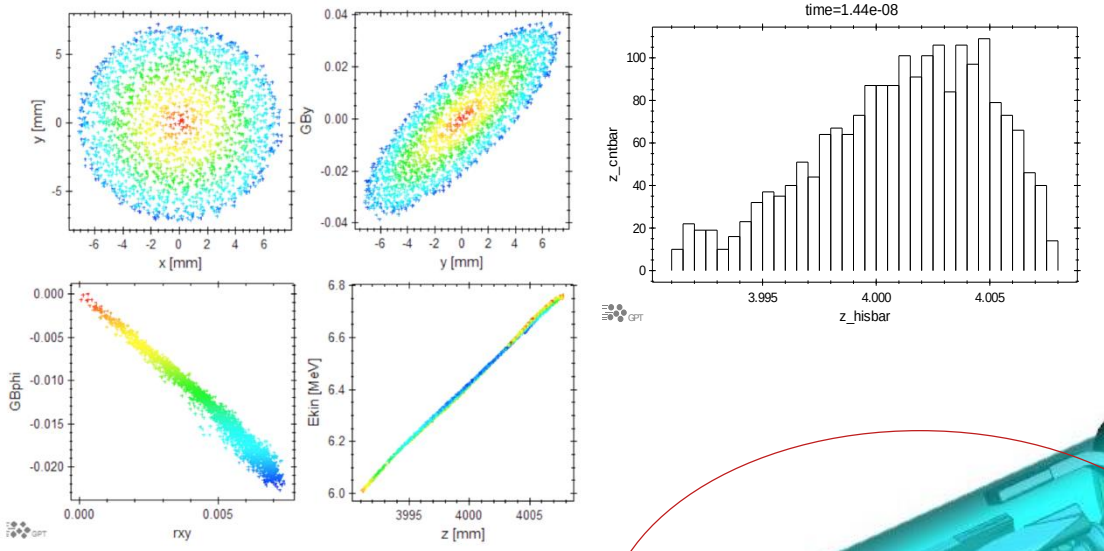

1.6 nC

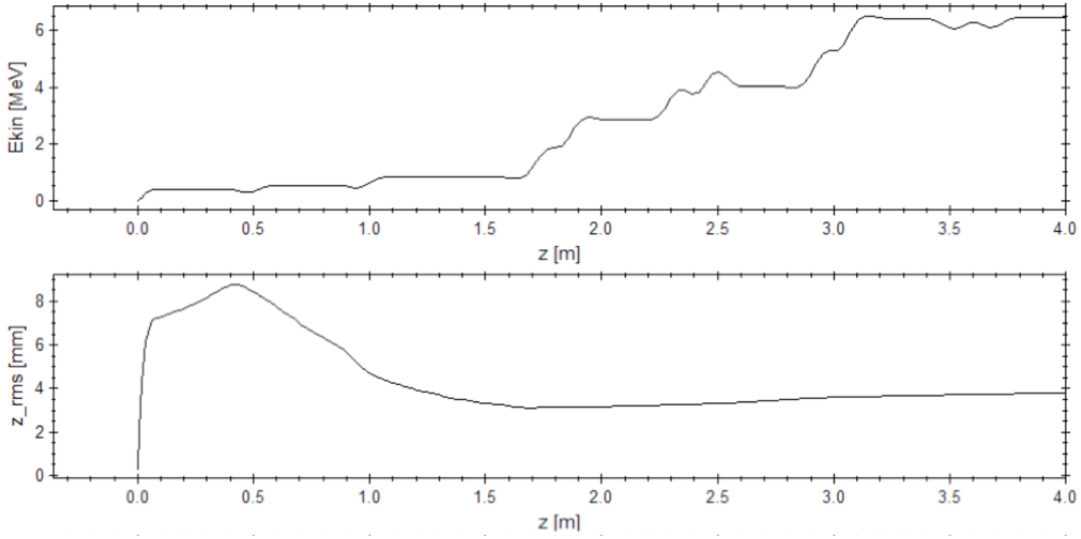

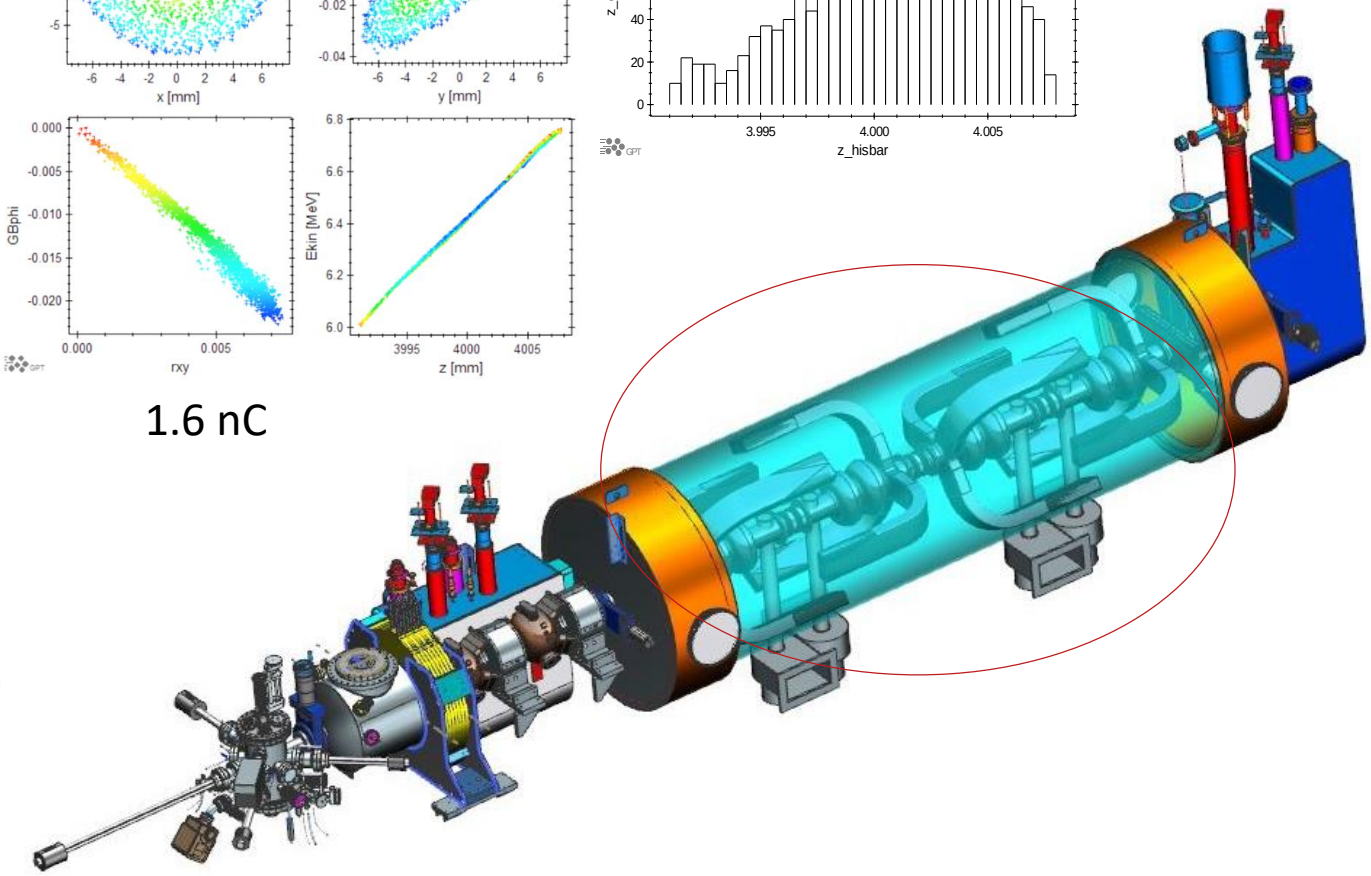

Jefferson Lab

e-ring impedance thresholds

- Broadband damping of HOMs with on-cell dampers better than with any other design including enlarged tubes to un-trap low frequency modes
- PEP-II type feedback systems allow running above threshold.
- Beam tube absorbers might still be needed outside of cryomodules for high frequency power

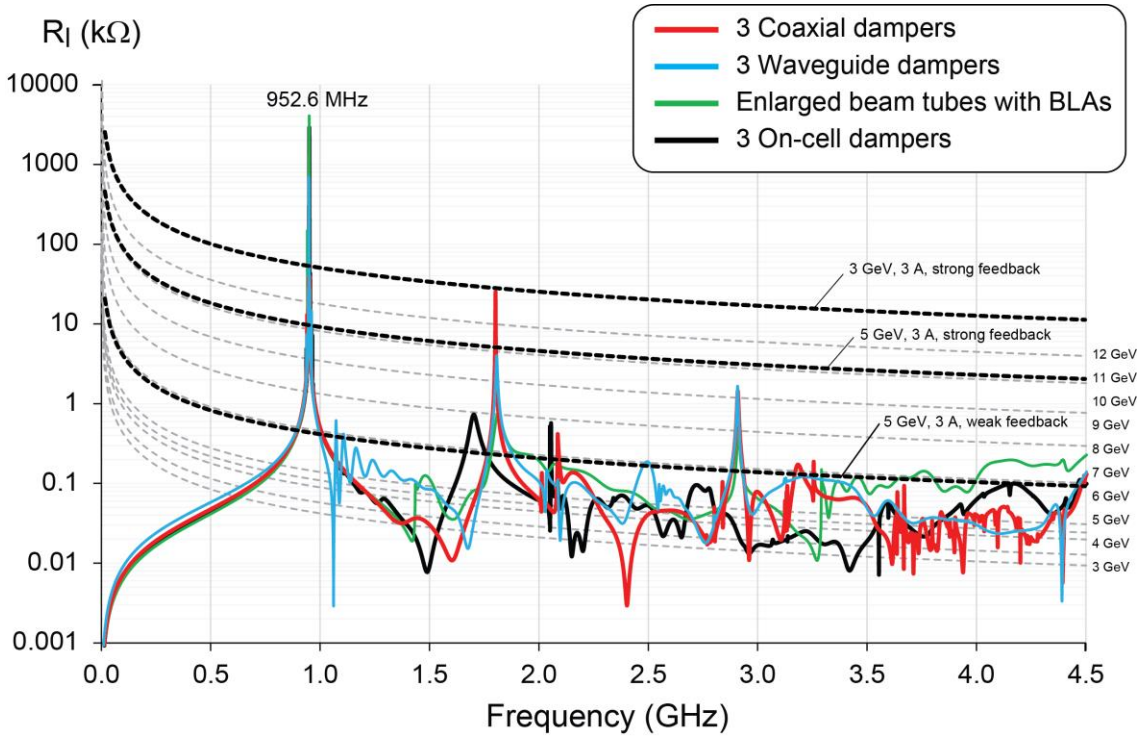

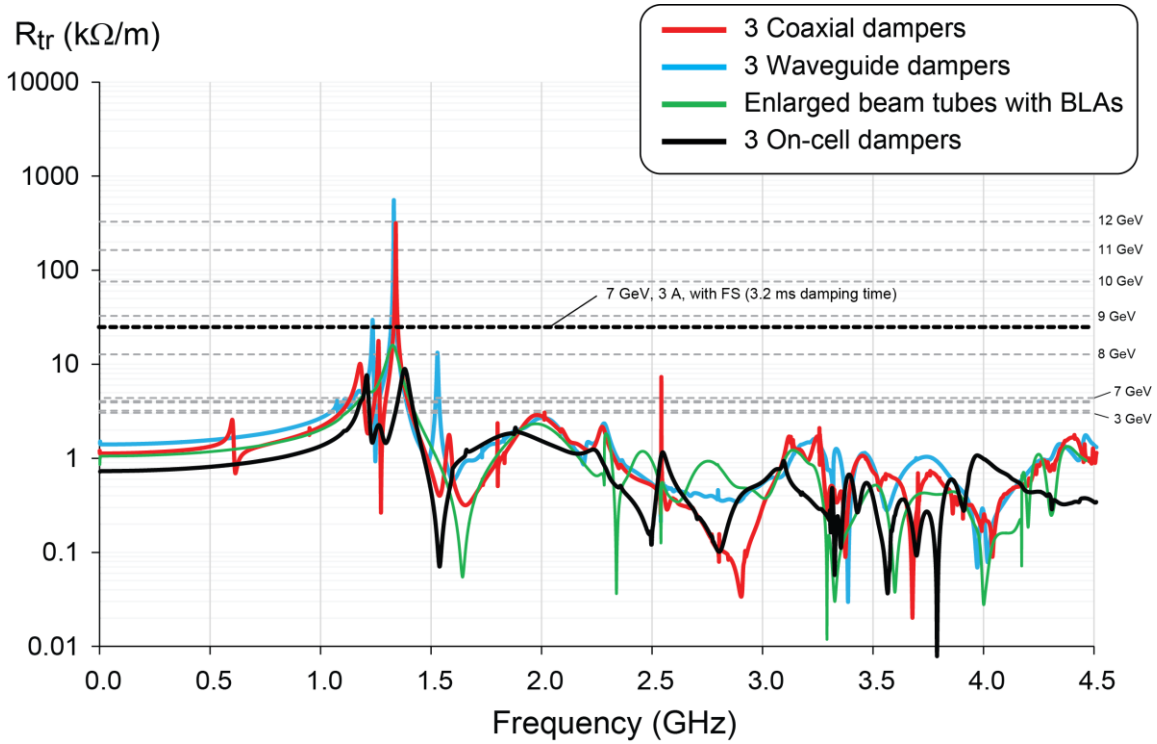

F. Marhauser, "Next Generation HOM-damping", Special Issue on Superconducting RF for Accelerators, to be published

Heavily-Damped Collider Ring Cavity

New JLab LDRD

- Progress has been made to design of a heavily damped 952.6 SRF single-cell cavity with on-cell waveguide dampers
- The effective and broadband HOM damping with a similar arrangement of three waveguide dampers is well proven with normal-conducing cavities (e.g. BESSY 500 MHz cavity and PEP-II 476 MHz cavity)
- The magnetic field enhancement at the surface (openings) can be limited to a factor of ~2 compared to standard elliptical cavities, around ~15 MV/m are feasible

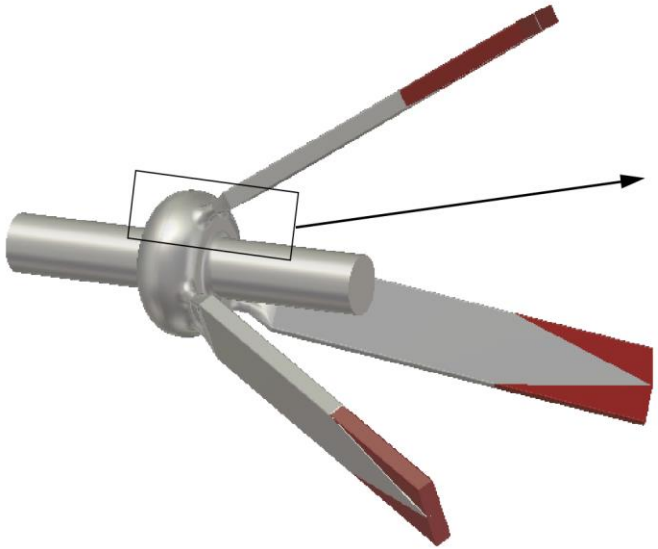

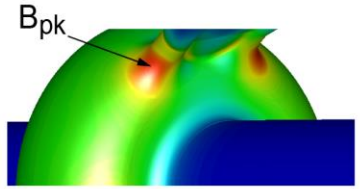

RF magnetic field contours

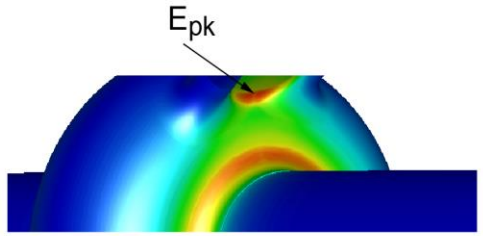

RF electric field contours

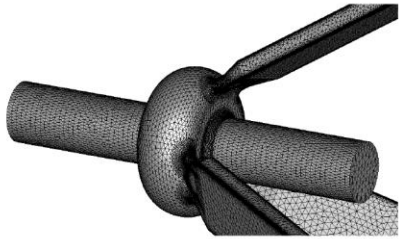

Tetrahedral mesh representation

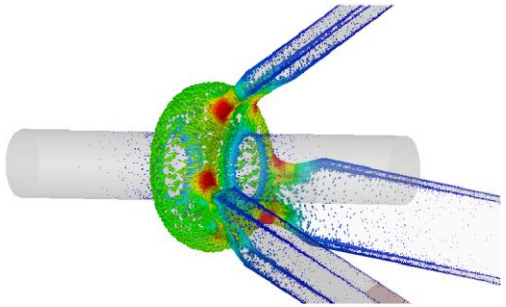

Surface currents

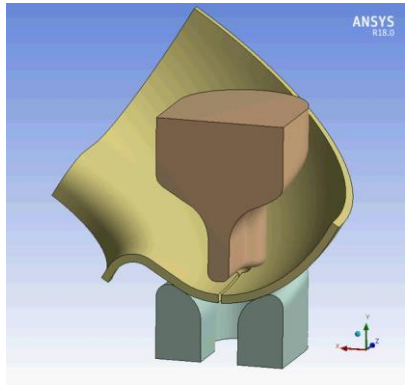

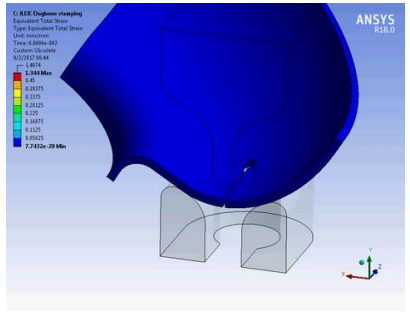

First mechanical forming test

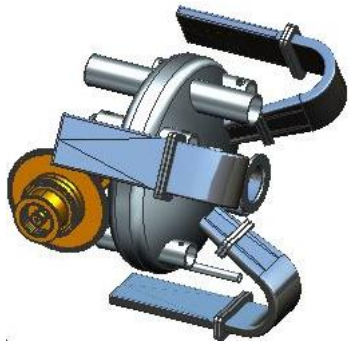

F. Marhauser, "Next Generation HOM-damping", Superconductor Science and Technology, Volume 30, Number 6, Published 15 May 2017.

Modular helium vessel

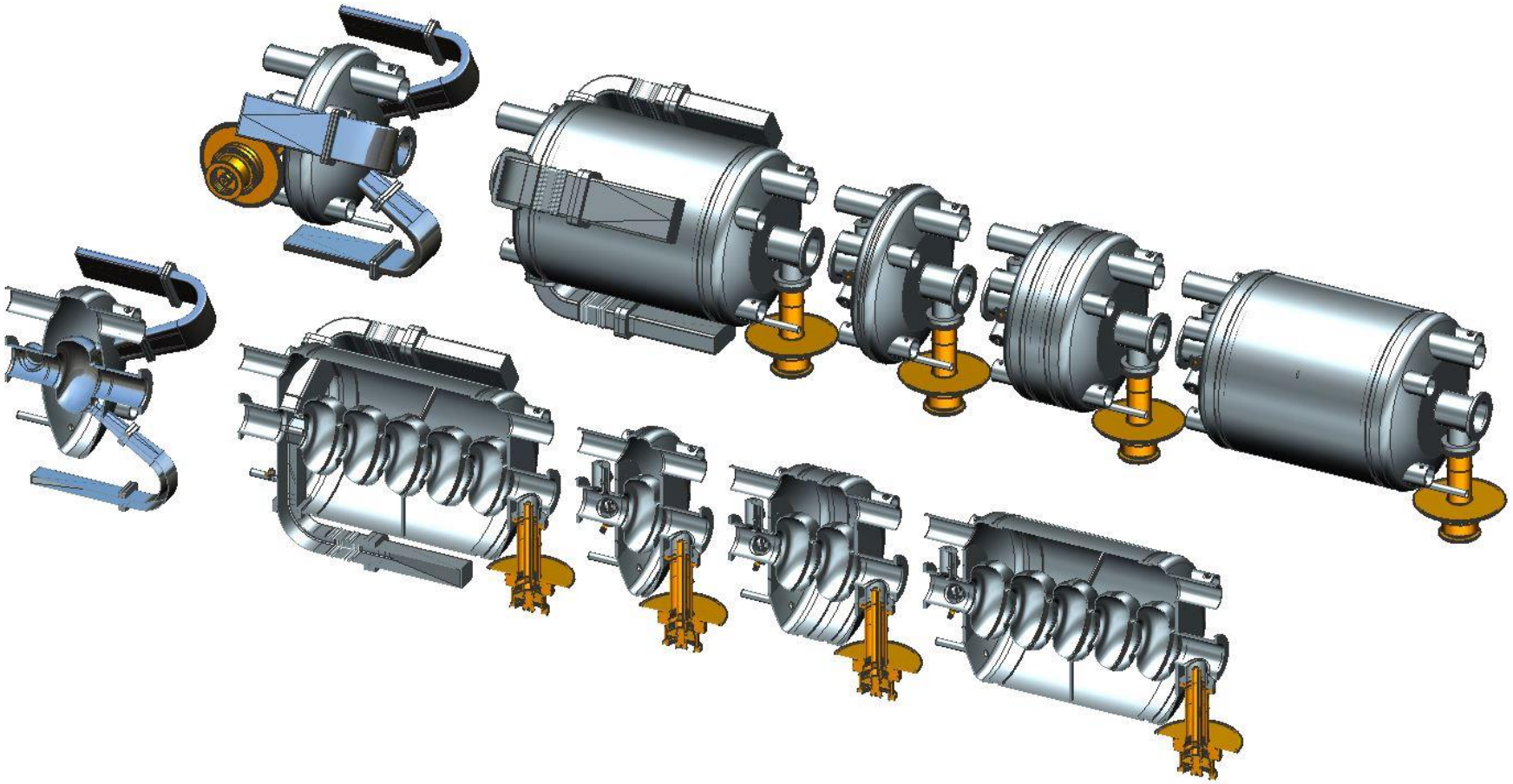

1 to 5 cells, coax, WG or on-cell dampers

Modular cryostat

- Take the best features of previous JLab designs
- Modular approach to hold various different cavities
- Design suitable for industrial production
- Simple concepts, low parts count to reduce costs

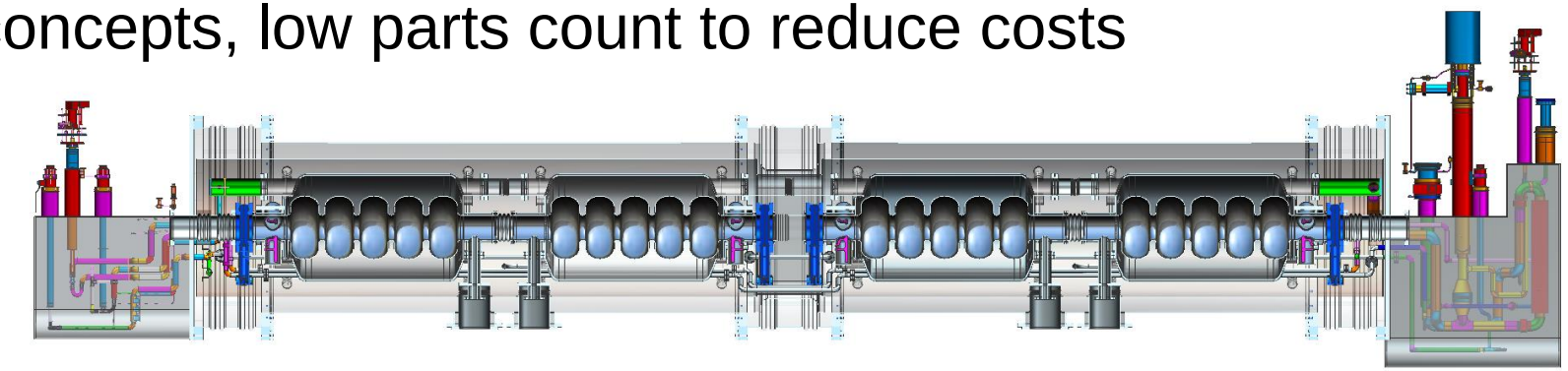

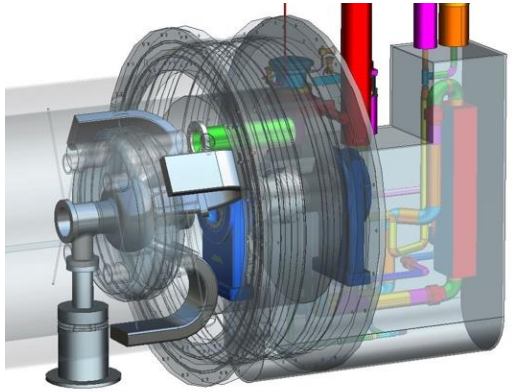

Waveguide damper concept

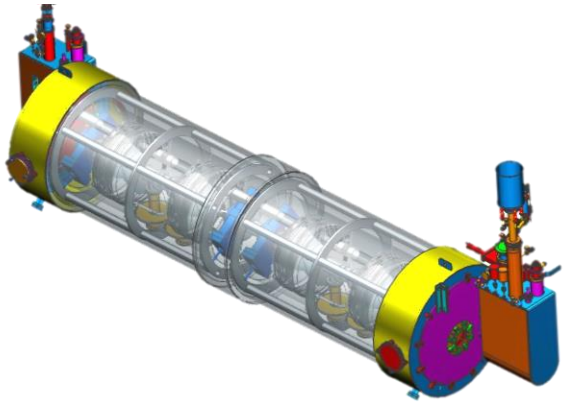

4 x 2-cell cavities

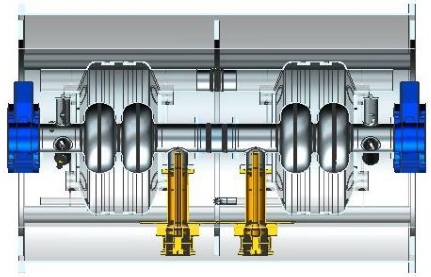

2-cell “pair”

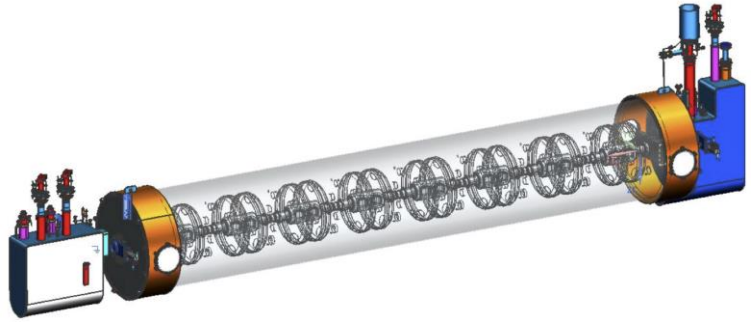

Crab module

Conclusions and future work

- JLab High-current cell shape has been developed for 952.6 MHz
- Bare 1-cell and 5-cell cavities have been tested successfully
- Four HOM damping schemes have been compared
- Cavity choices have been made for
  - **Ion ring (2-cell, WG damped)**
  - **Cooler ERL (5-cell WG damped)**
  - **Cooler booster (2-cell WG damped)**
  - **Electron ring (1-cell on-cell damped)**

Path forward

- Prototype cavities with WG end groups (VA state funding)
- Continue cooler ERL cavity development (FY18 FOA on strong hadron cooling)
- Continue on-cell damper cavity development (JLab LDRD)
- Continue development of SRF systems for pre-CDR (JLab base ops funding)
- Study power requirements and transient behavior (via collaborations)
- Try Nb_3Sn or Nb on Cu thin film at 952.6 MHz?

Thank you!

Narrow Impedance : Crab Cavity (e-Ring: 2 crab cavities, Ion Ring: 8 crab cavities)

- Prototype converging to a 952.6 MHz 2-cell RFD cavity.
- HOM damping under development

(HK Park, ODU)

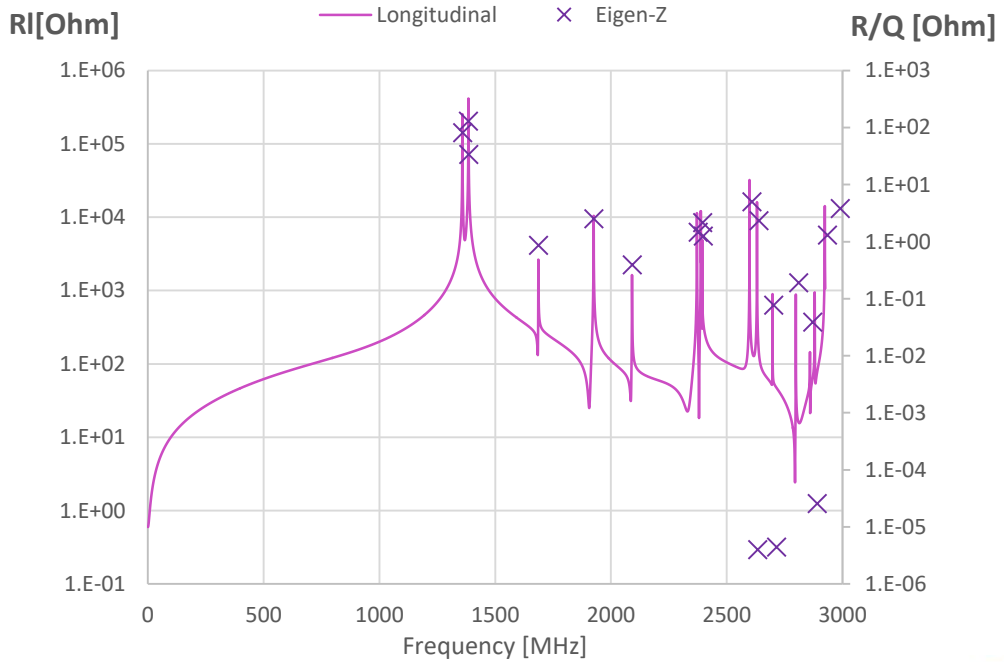

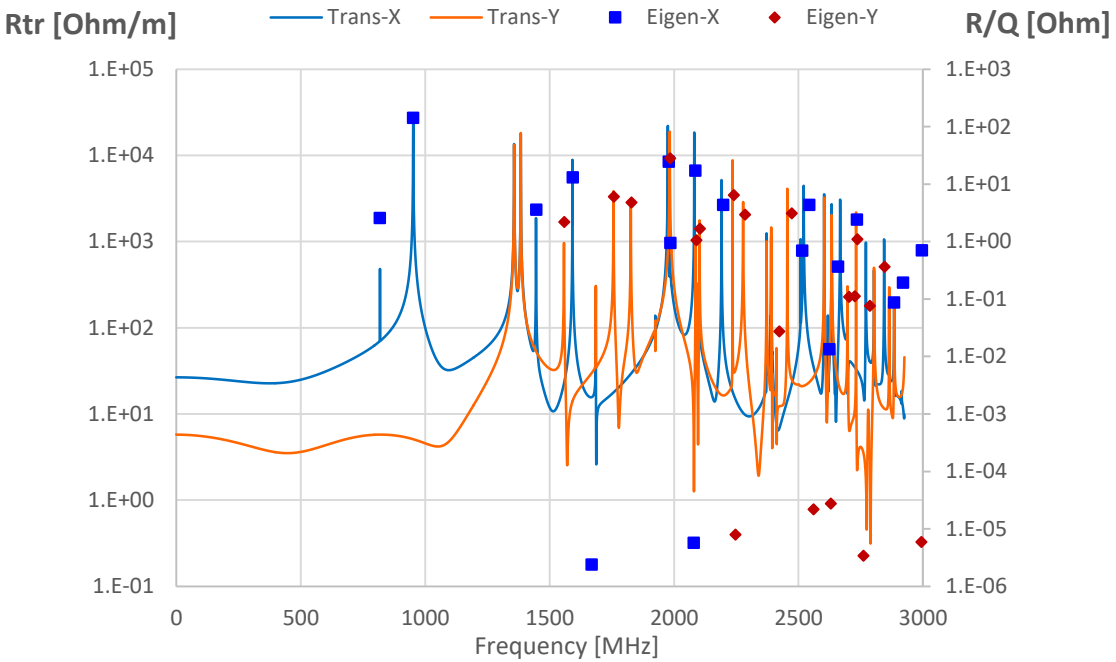

RFD type cavity

2 hook couplers

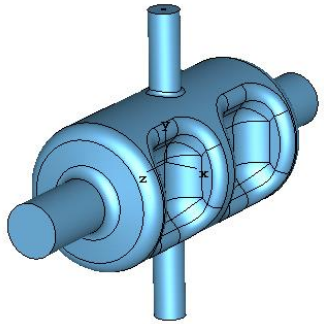

Damping under study

2 wave guides

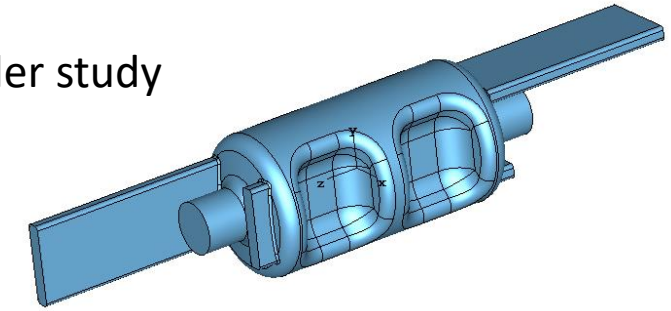

Jefferson Lab

HOM Power Estimate for JLEIC CCR ERL, case 3

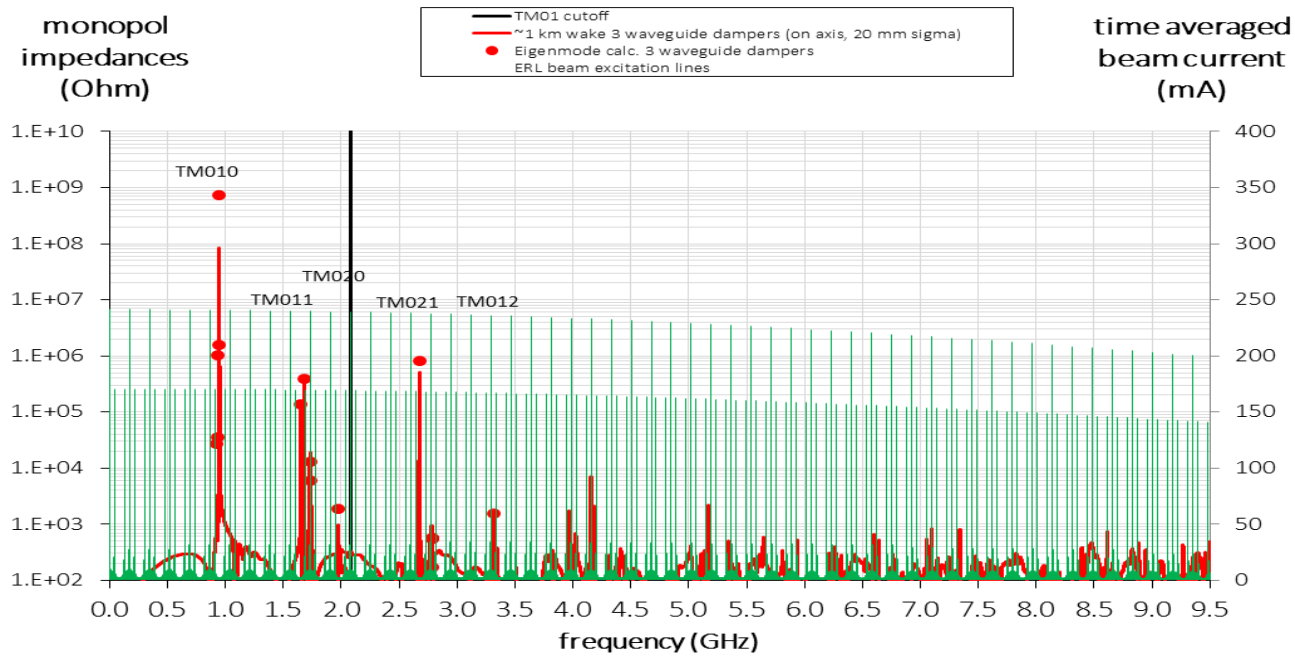

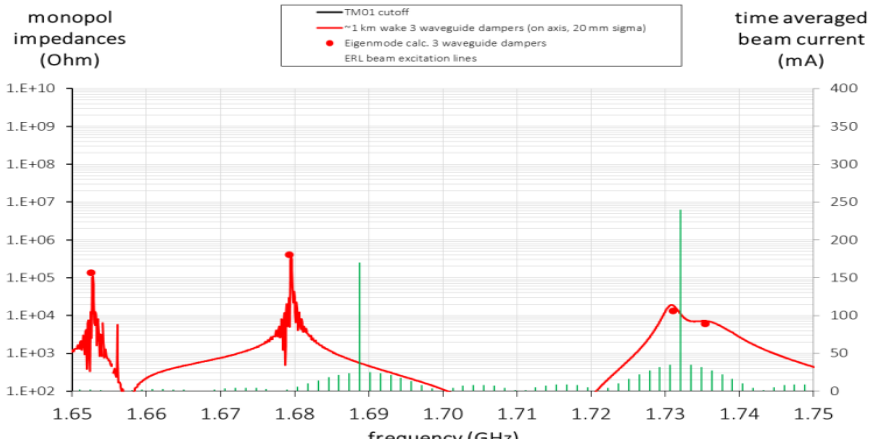

Case 3: Cooling/collision rate 476.3 MHz,
P = 2 kW up to 9.5 GHz (3 waveguide dampers) for Q = 3.2 nC

Corresponding to ERL injection current 120mA, CCR cooling current 1320mA
If CCR cooling current is scaled to 1.5A, HOM power scales to 2.6kW

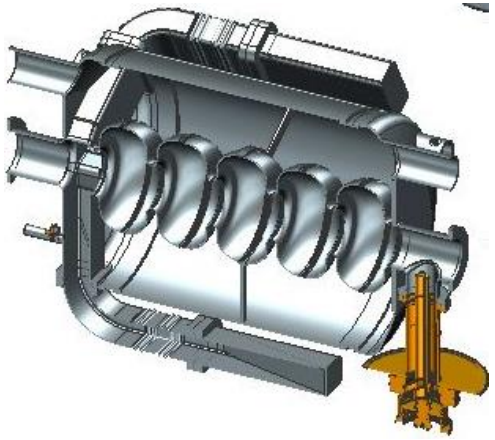

Beam Transients in collider rings

Gaps in high current rings cause strong transients (e.g. KEK-B, PEP-II). Difficult to correct by RF alone.

Does Fill Pattern Modulation* Work? YES!

ALS data (electrons)

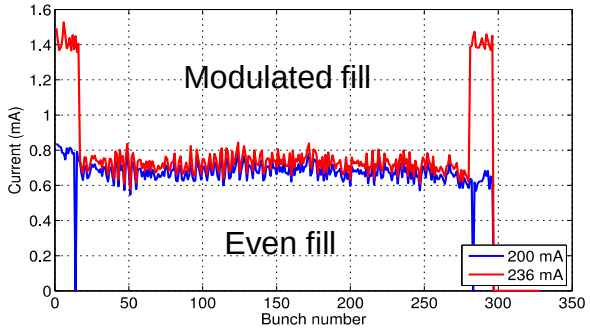

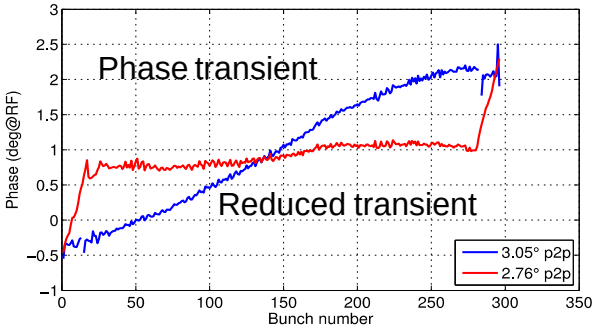

D. Teytelman, Dimtel, Inc., San Jose, CA, USA.
"Transient beam loading in FCC-ee (Z)", FCC Week 2017

Or match transients between rings?

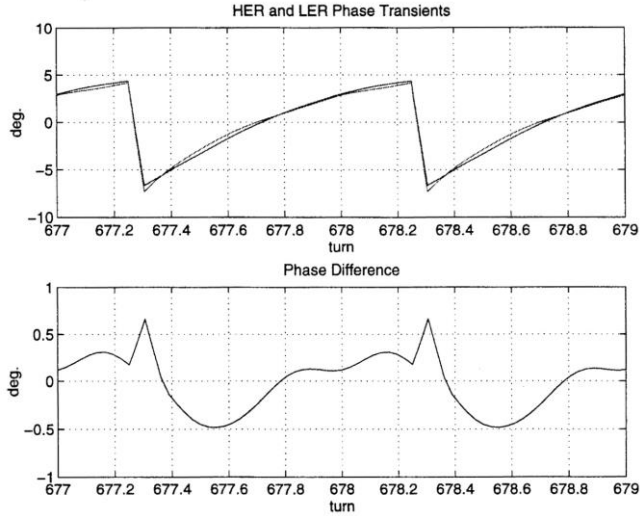

Results in variable arrival time at IP

Baseline: ions binary bunch splitting.
Results in long gaps

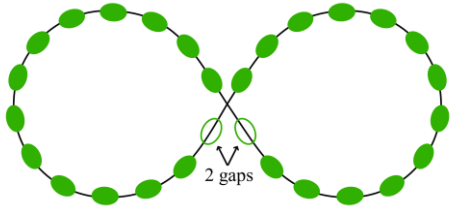

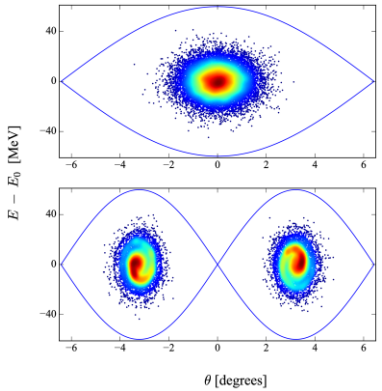

Alternative: barrier bucket re-bunching?

Randy's talk

Injection and acceleration

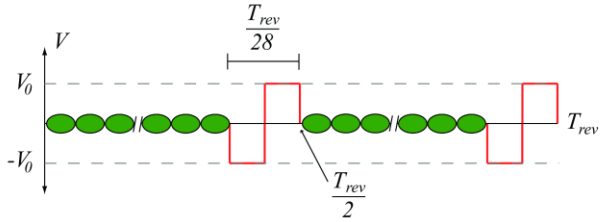

Debunching and coasting

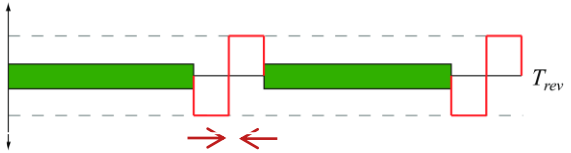

Can we shorten the gap?

Rebunching

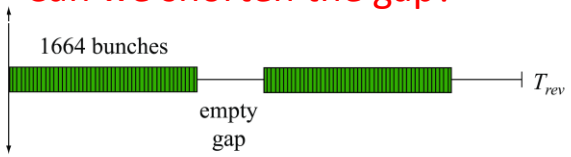

* J.Byrd et. al.,Phys.Rev. ST Accel. Beams 5, 092001 (2002)

Nb_3Sn: Coating system upgrade - G. Eremeev Early Career Award

- Coating 5-cells and 1-cells goal is Nb_3Sn cryomodule with beam
- Continuous process optimization

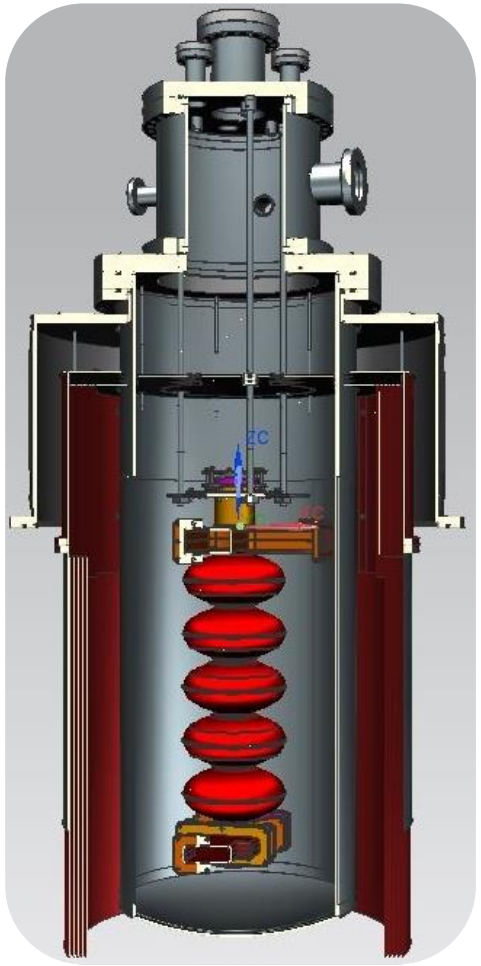

System upgrade design

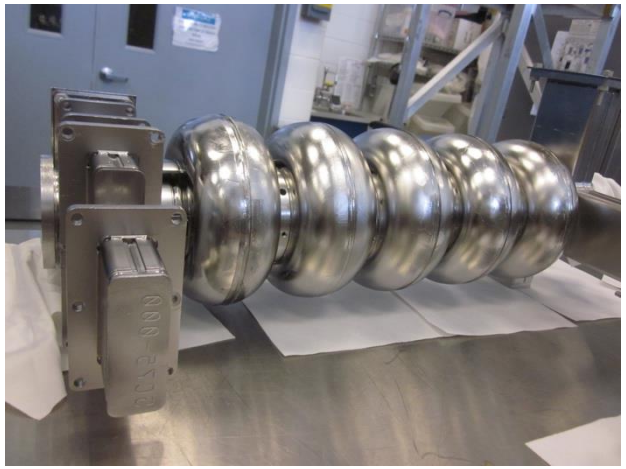

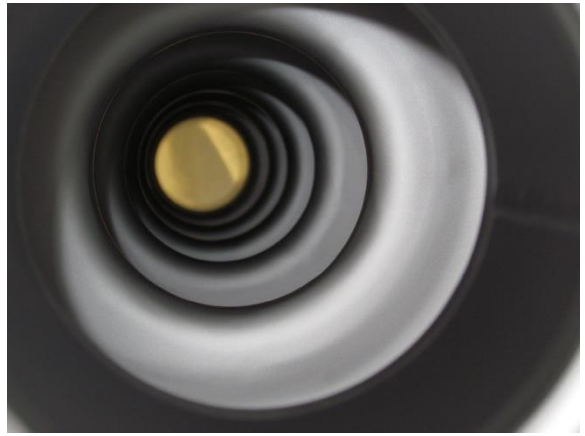

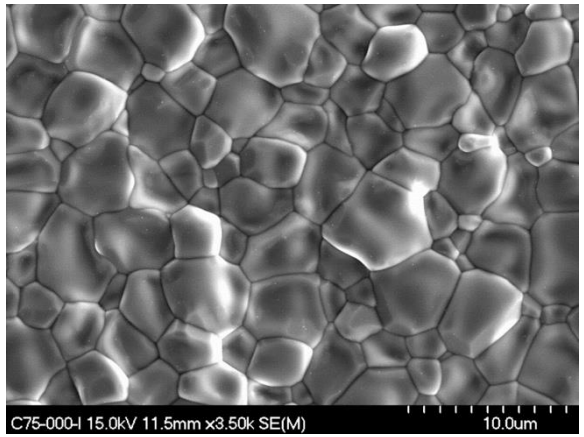

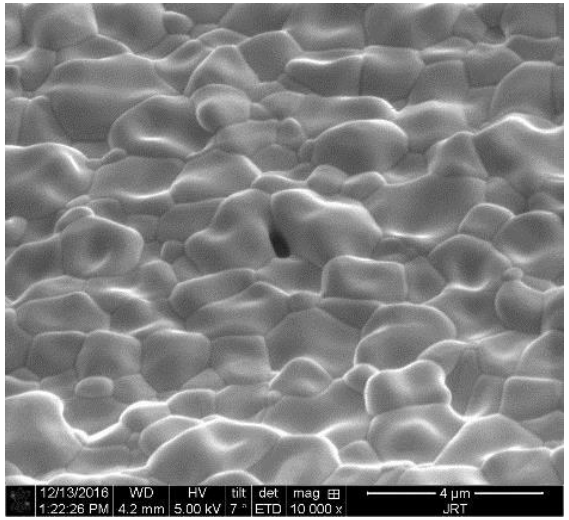

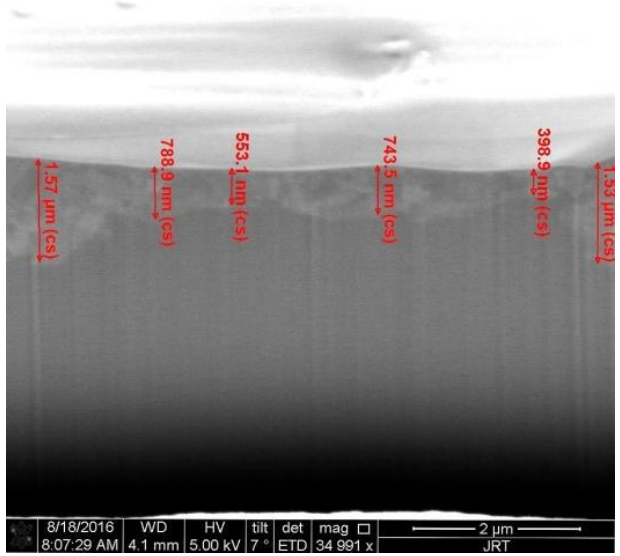

G. Eremeev, U. Pudasaini, et. al

Jefferson Lab

Nb_3Sn: New Cavity results

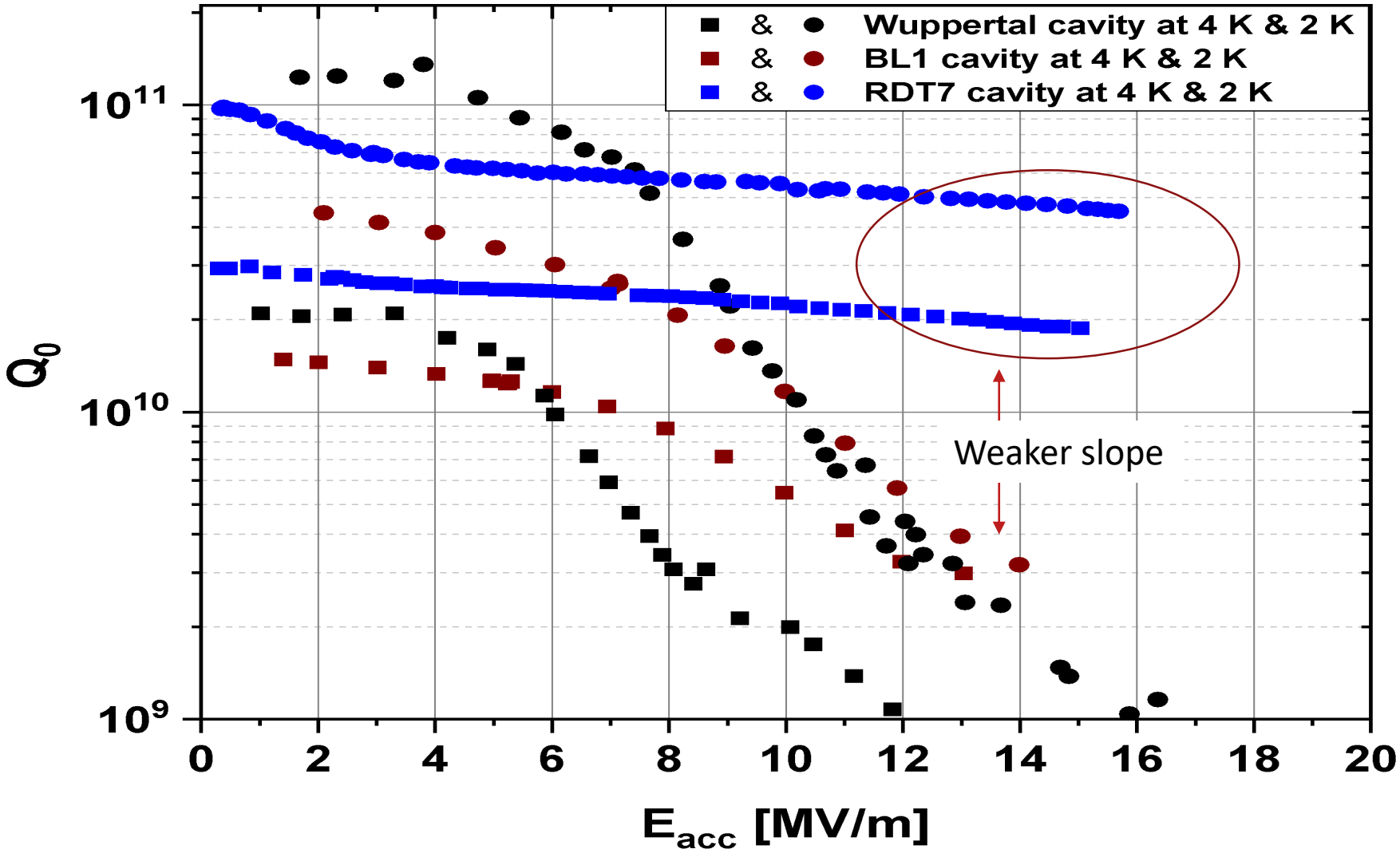

Following titanium hypothesis, during the coating system upgrade efforts were made to avoid any potential titanium sources. Only all niobium cavities are allowed to be coated now. NbTi flanges were replaced with Nb flanges on RDT7.

G. Eremeev, G. Ciovati & U. Pudasaini

Nb/Cu Technology: Energetic Condensation with HiPIMS

HiPIMS cavity system re-commissioned and back in operation

- New Nb cathode
- Tripled Pulse Power Capability
- Permanent Vertical System Operation
- Very low surface roughness
- Bulk-like crystal structure
- Hetero-epitaxial Growth
- First cavity coating tests encouraging
- Excellent film adhesion

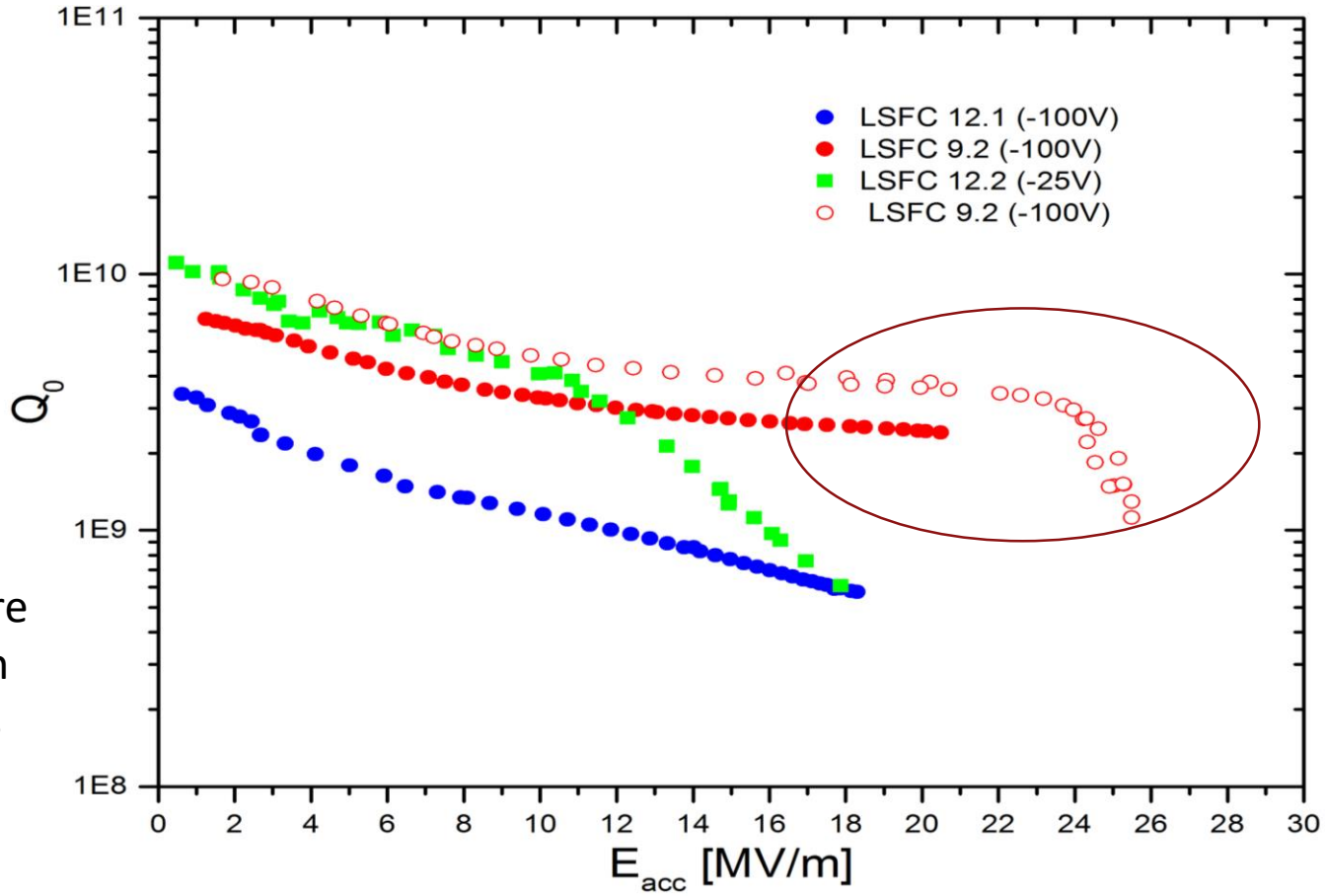

HiPIMS Cavities: 1.3 GHz, Kr, 2 K

Compare well to CERN HiPIMS results for similar conditions

So far dominated by residual losses

Cu substrate & chemistry issues

A. Valente, L. Phillips, M. Burton