Fast Feedback System & Kicker Design

CFB: Fast Feedback System and Kicker Design for e-Ring Coupled-Bunch Instability Control with 2 ns Spacing

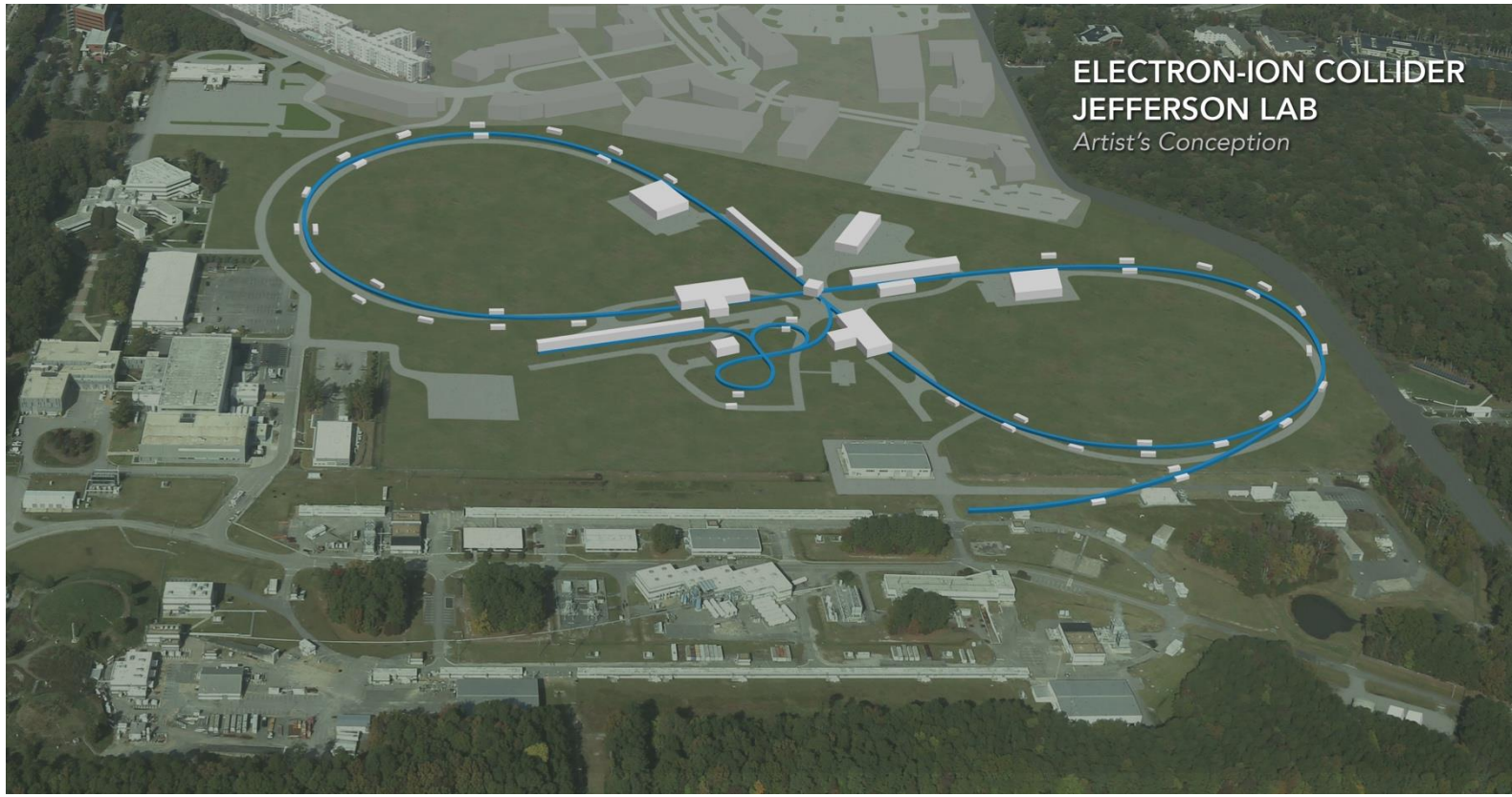

R. Rimmer

Jefferson Lab

U.S. DEPARTMENT OF ENERGY | Office of Science

JSA

CFB: Fast Feedback System & Kicker Design (PI: R. Rimmer)

- Description
  - Conceptual design and specification of a fast feedback kicker system for the JLEIC e-ring for up to 3A current, 476.3 MHz bunch rate (2.1 ns), at 3 GeV. This work will be performed in collaboration with Industry.
- Status
  - In progress
- Main goal
  - Demonstrate capability for stable beam operation at maximum current over JLEIC operating energy range of 3-12 GeV. This is up to 3A at low energy reducing at higher energy limited by 10 MW synchrotron radiation power
- Supported by JLab's Additional DoE NP Accelerator R&D funding
- The project's funding is not continued by the FY'18 NP Accelerator R&D FOA. However, one collaboration funded FY'18 project with ANL(PI Zack Conway) will benefit from this project's results.

Fast Feedback System & Kicker Design

- Budget

	FY'17-FY'18	Totals
a) Funds allocated	$135,000	$135,000
b) Actual costs to date	$64,935	$64,935

- Deliverables and schedule

Task	FY'17 Q1	FY'17 Q2	FY'17 Q3	FY'17 Q4
System specifications and electromagnetic design of fast feedback kickers for this application				**x**

- The project corresponds to Line 19, "High-power fast kickers for high bandwidth (2 ns bunch spacing) feedback", Priority High-B of the Jones' Panel report

Statement of the problem to be solved

- The JLEIC electron and ion storage rings are high-current with many bunches
- The individual bunch charge is chosen to avoid single bunch instability limits
- Collective effects and multi-bunch instabilities are challenging
  - Dominated by narrow-band impedances from RF cavities, vacuum chamber, collimators, etc.
  - Compared to PEP-II we will have more cavities and reach to lower energy
- Broad-band bunch-by-bunch feedback systems are necessary
- Such systems are routinely used in B-Factories and light sources
- **What are the requirements of the feedback systems?**
- **What technical solutions are appropriate?**

Coupled Bunch Instability

This instability happens when single bunch coherent motion gets coupled among bunches when there is long range wakefield.

- Single bunch modes in longitudinal phase space

Rigid bunch oscillation

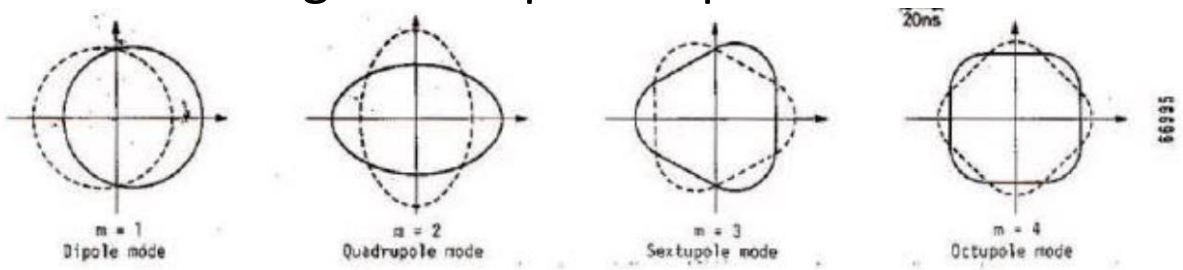

Higher order bunch shape oscillation

a=1 a=2 a=3 a=4

- Coupled Bunch Modes

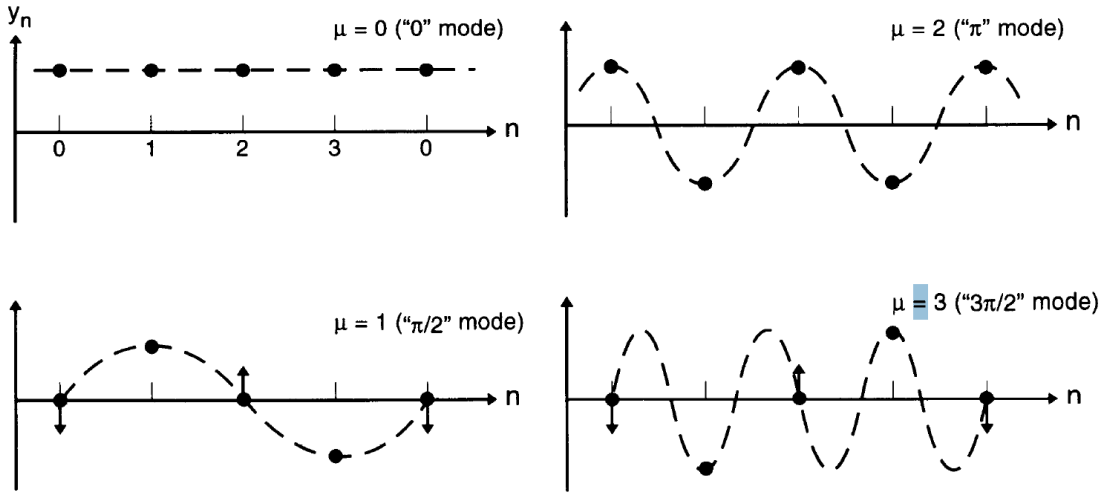

PEP-II actual bunch rate ≤ 476/2 = 238 MHz,
119 MHz BW needed (kickers built)
Transverse FB electronics DC-238 MHz
W. Barry, PAC95
LFB cavity 952-1190 MHz
(1071 MHz center frequency, 238 MHz BW)
P. McIntosh PAC03

Narrowband Impedance Estimation: JLEIC e-Ring

- RF cavity in e-Ring (PEP-II cavities)

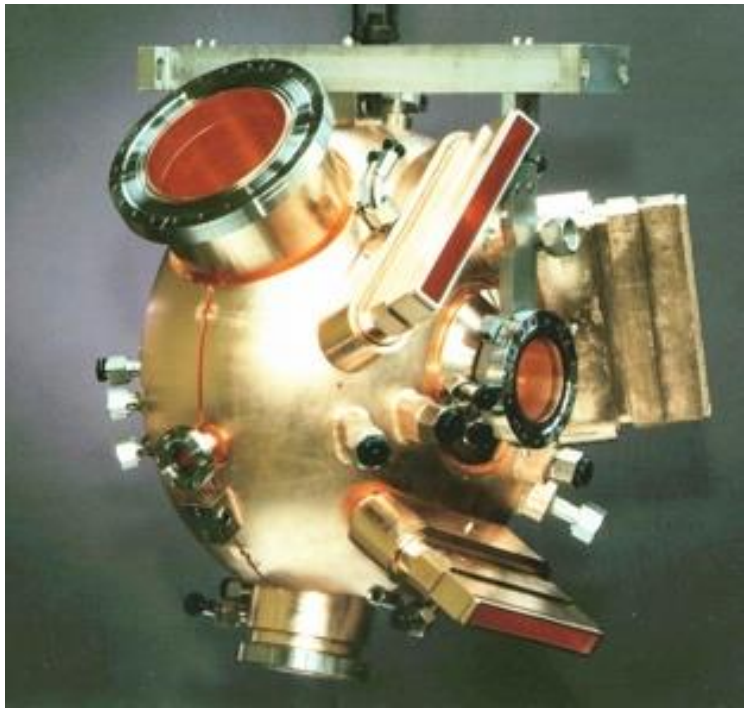

PEP II cavity
476 MHz, single cell,
1 MV gap with 150 kW,
strong HOM damping,

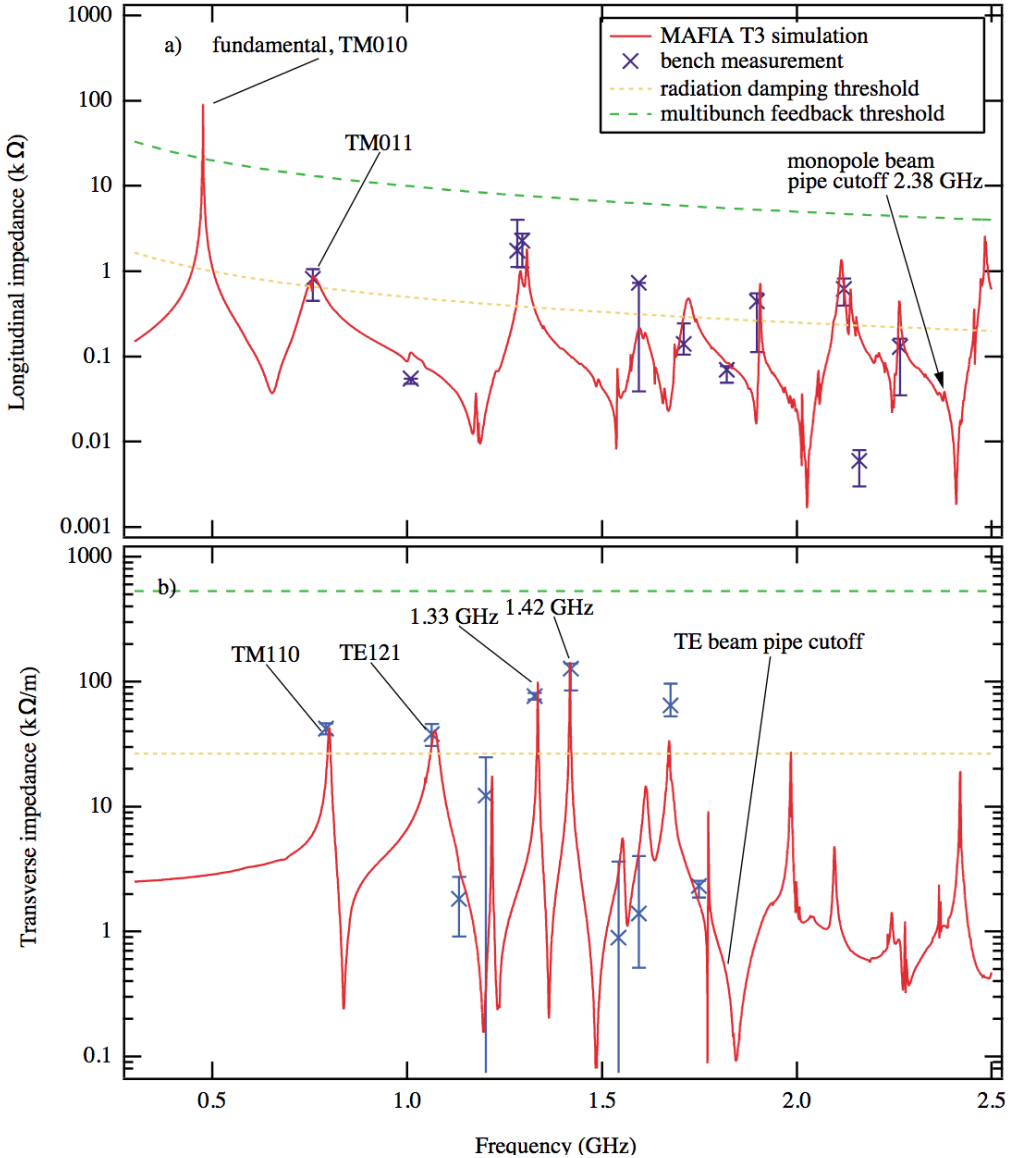

e-ring cavities

- e-ring baseline uses PEP-II RF at 476.3 MHz
- Need to adjust input beta for better match at 3A
- Large contribution to impedance budget
- Reconstructing RF model
- Starting station layouts

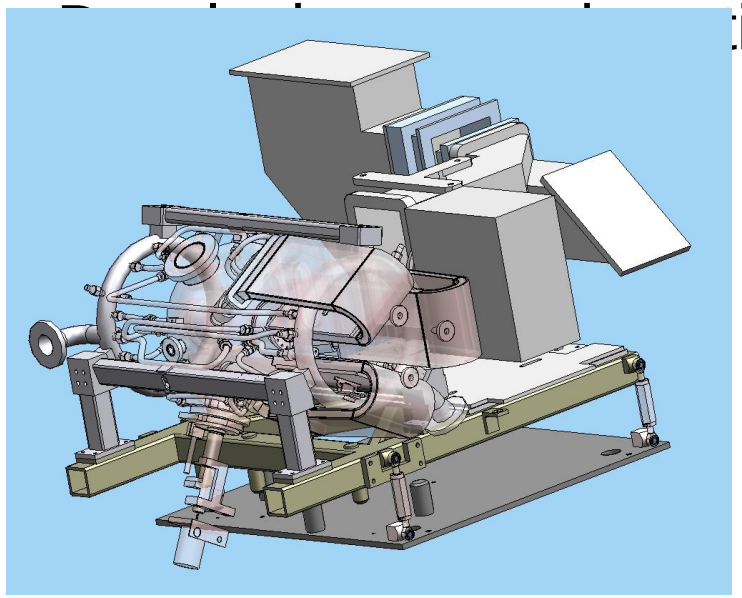

PEP-II raft assembly

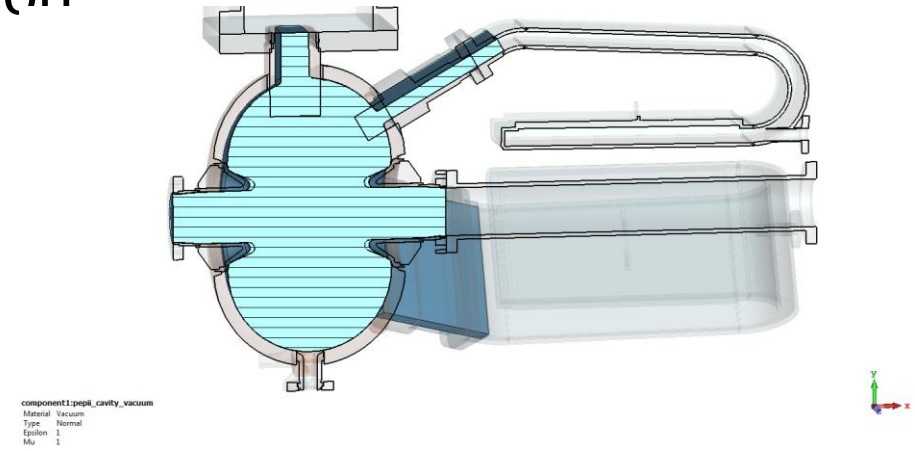

RF model

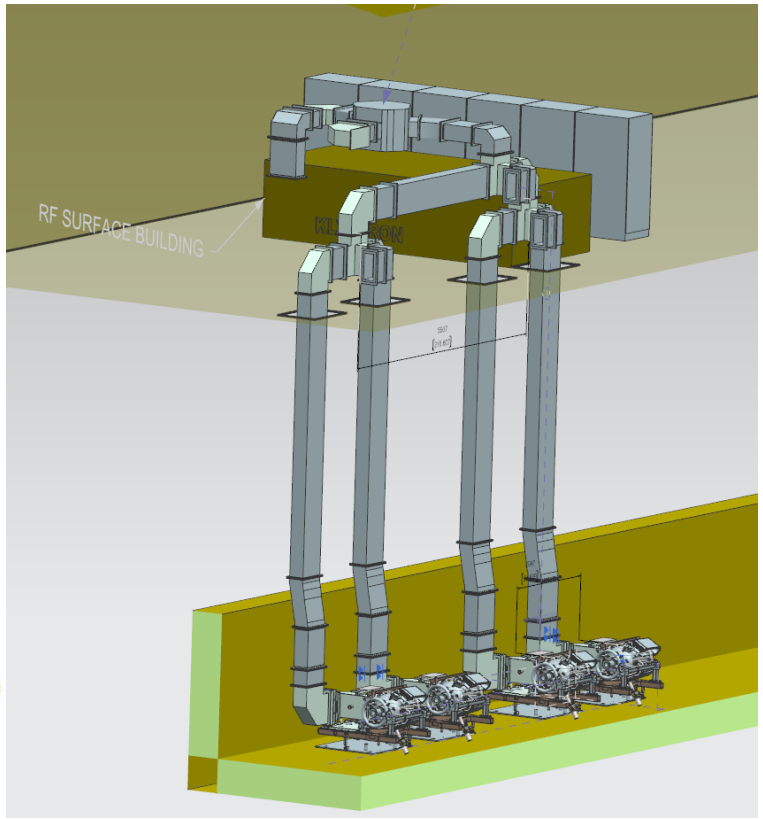

PEP-II station layout

Contributions to damping from Feedback and synchrotron radiation in e-ring

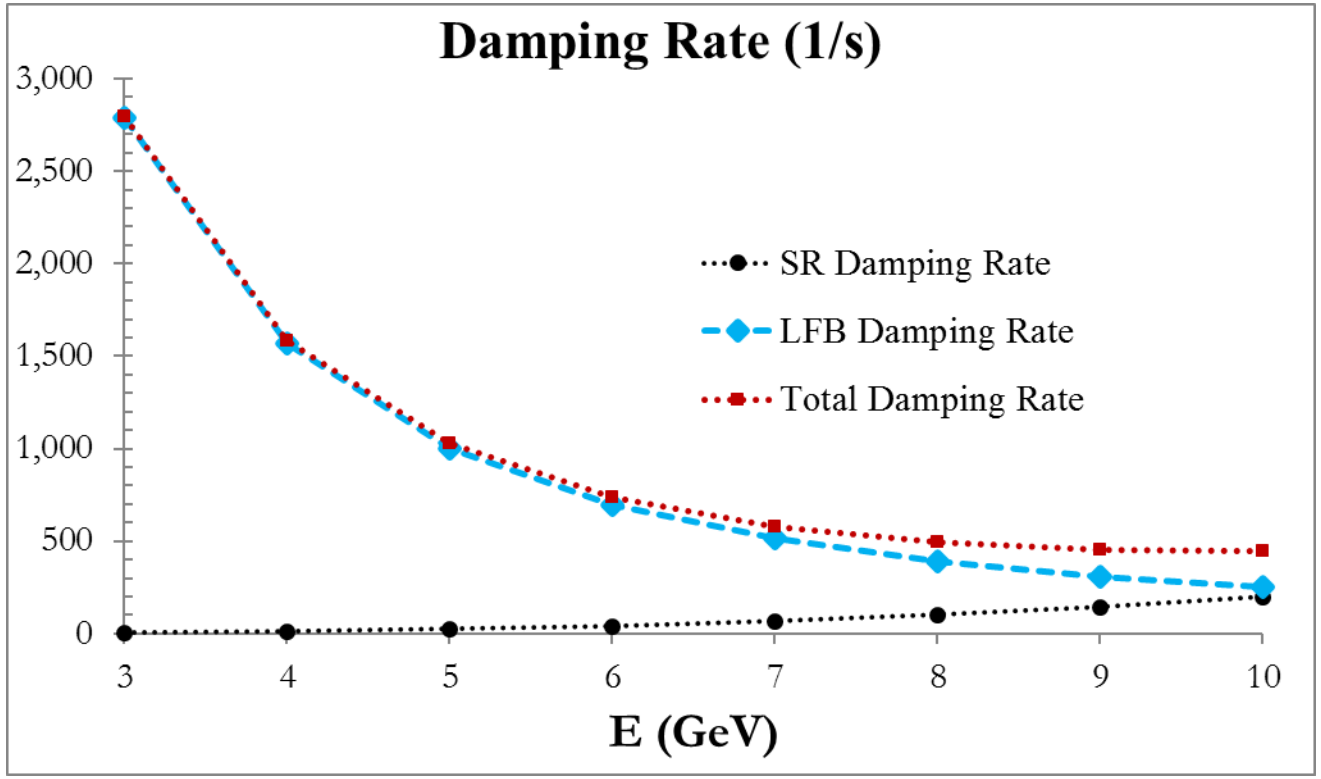

LFB: Longitudinal Feedback
LFB Kicker Total Voltage: 7kV
LFB phase resolution: 0.02 rad
Max LFB "Gain": 3.5e5

FFB system is mandatory!

Narrowband Impedance : JLEIC ion-Ring initial design

- 956 MHz 2-cell Cavity (F. Marhauser)

with coaxial couplers

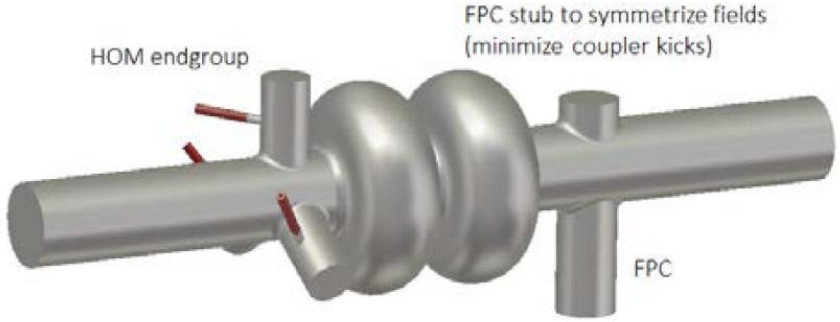

as tradeoff between accelerating and HOM-damping efficiency

Unstable!

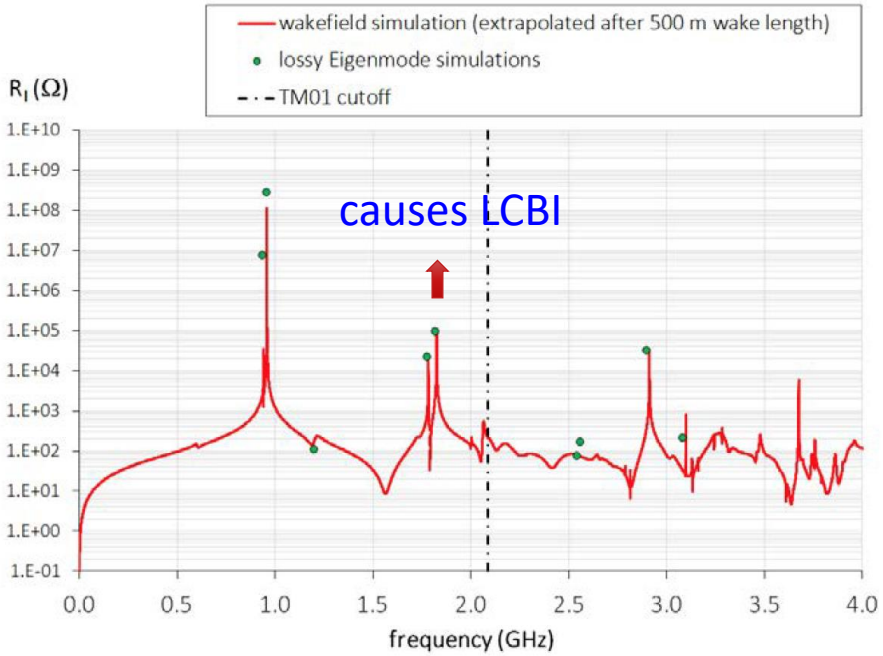

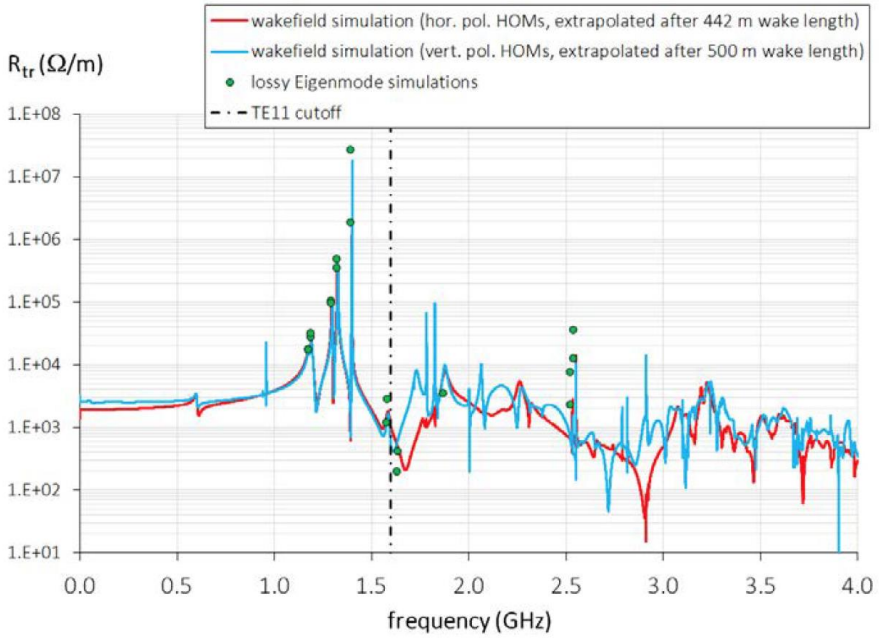

Jefferson Lab

Narrowband Impedance : JLEIC ion-Ring new baseline

- 956 MHz 2-cell Cavity (F. Marhauser)

Stable!

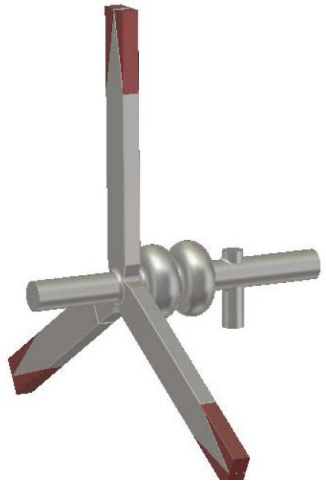

waveguide couplers

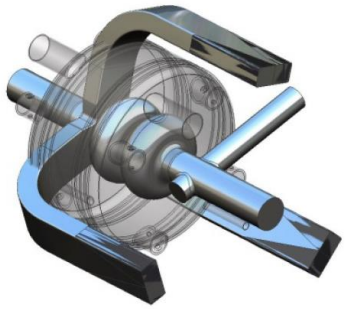

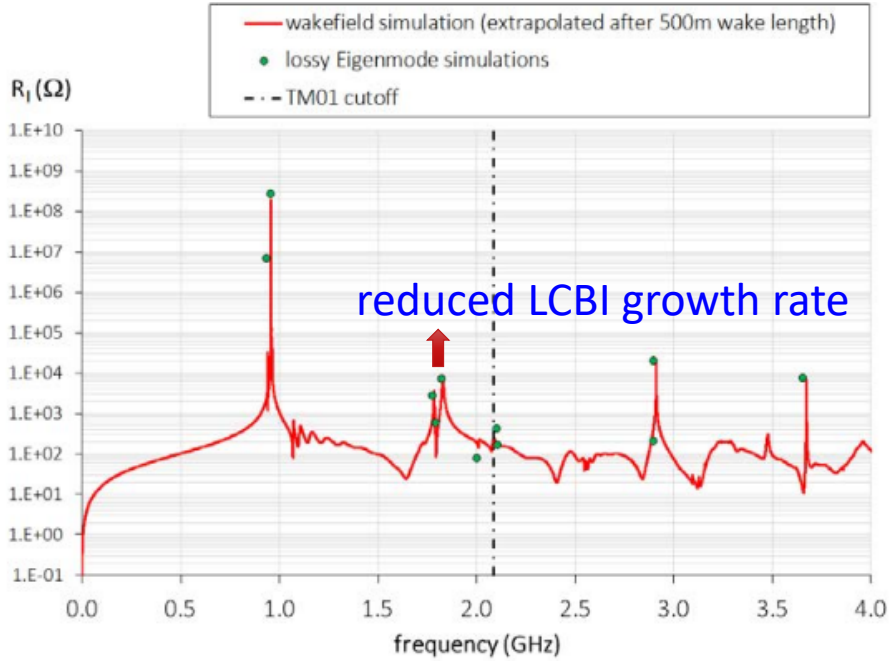

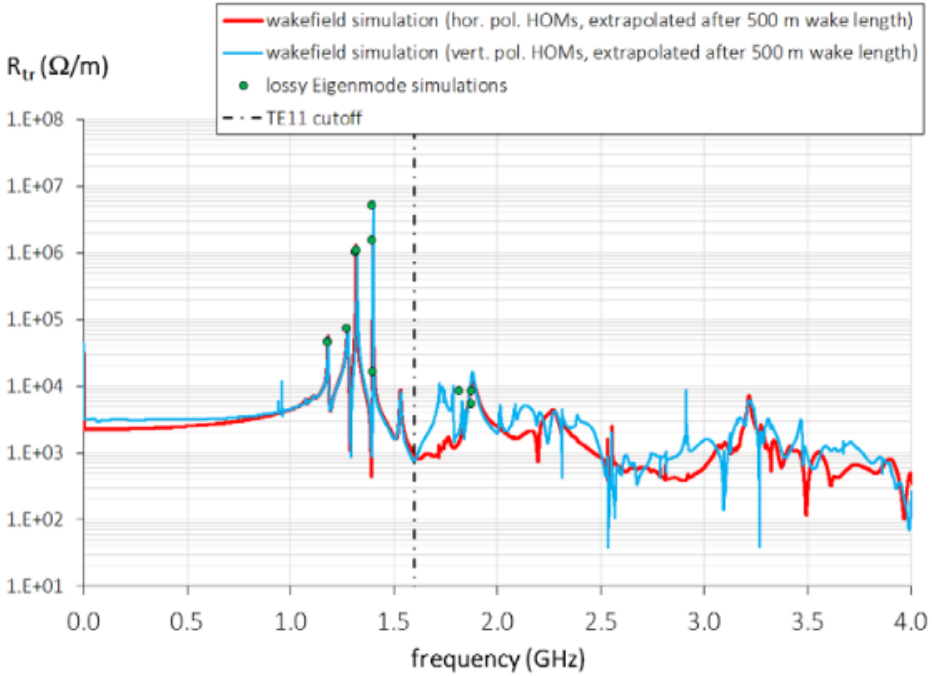

Jefferson Lab

Narrowband Impedance: IR Chamber first look

JLEIC IR Chamber CAD Model (Marhauser)

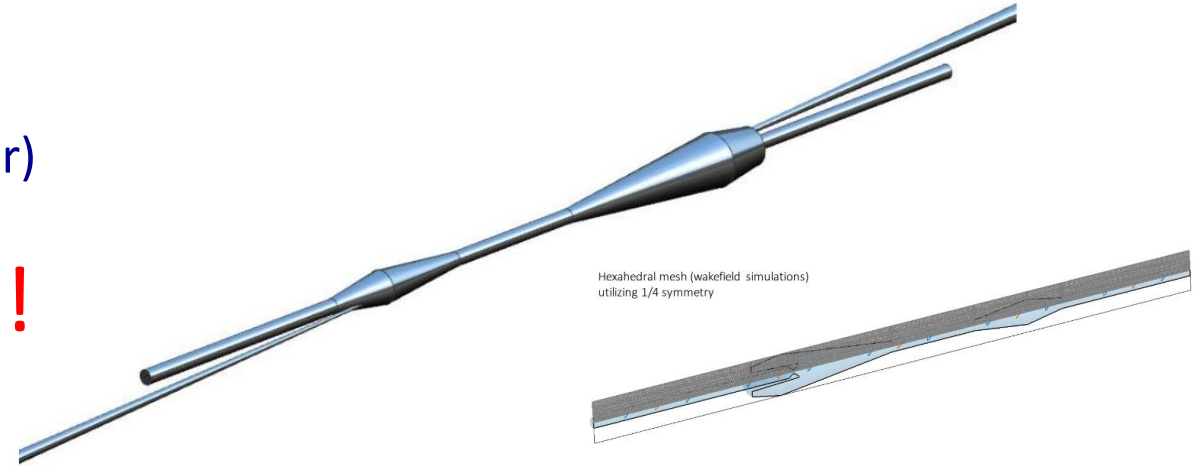

Many trapped modes!

Needs optimization

Monopole Modes

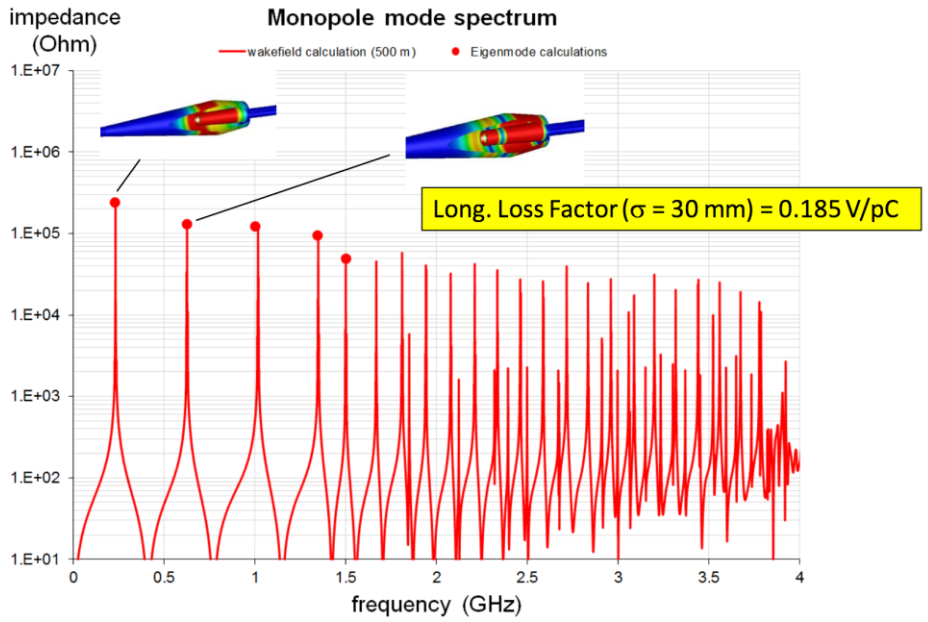

Dipole Modes

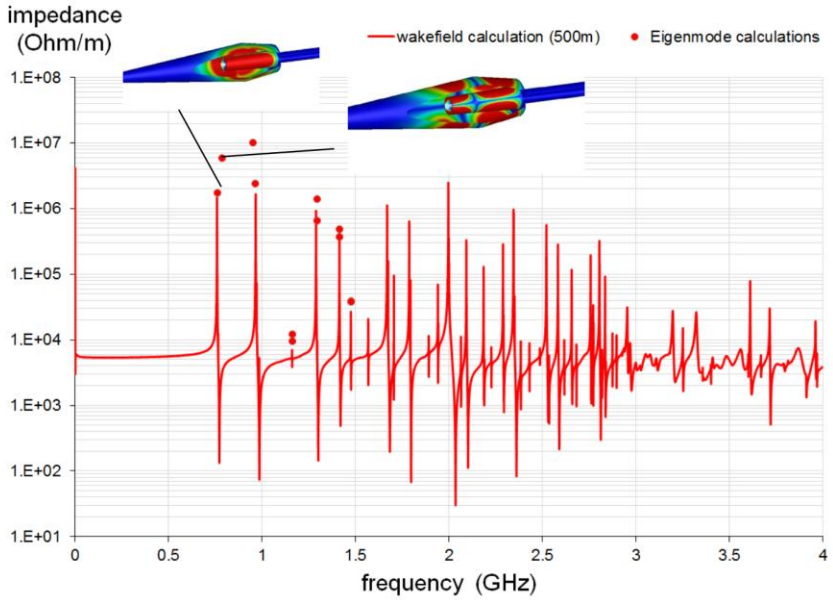

Jefferson Lab

Narrow Impedance : Crab Cavity (e-Ring: 2 crab cavities, Ion Ring: 8 crab cavities)

- Prototype converging to a 952.6 MHz 2-cell RFD cavity.
- HOM damping under development

(HK Park, ODU)

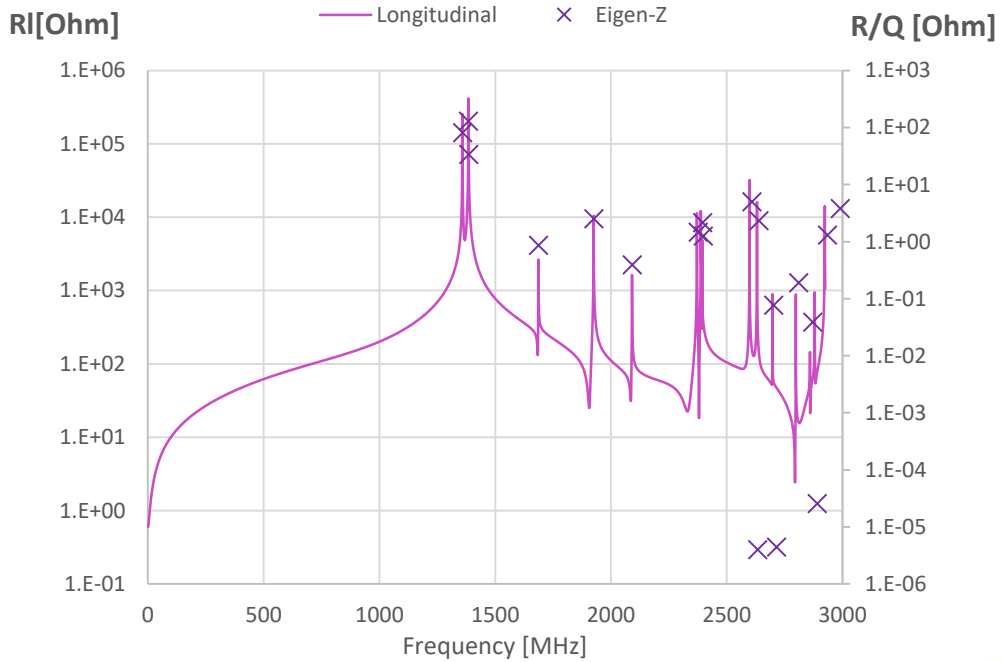

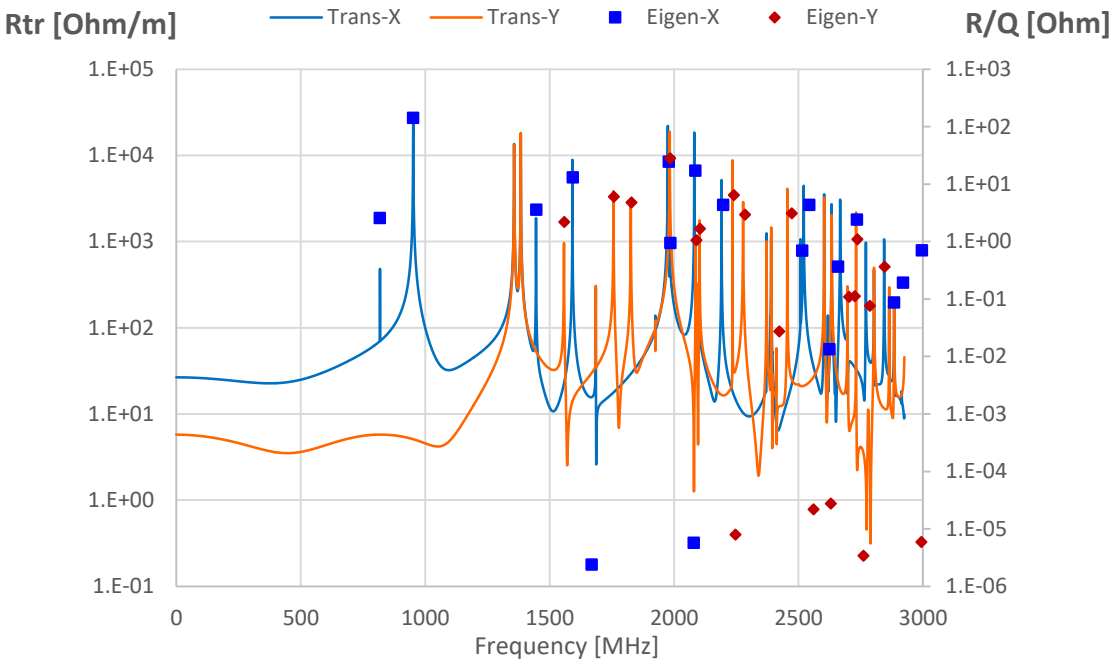

RFD type cavity

2 hook couplers

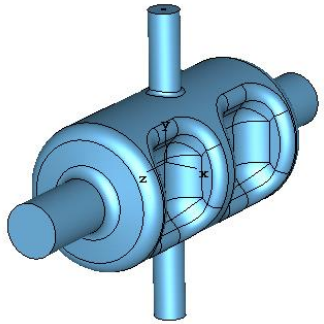

Damping under study

2 wave guides

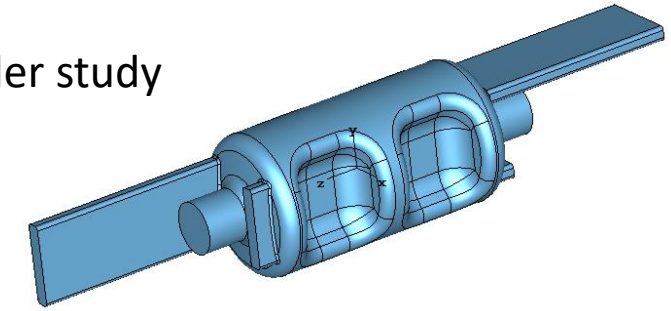

Jefferson Lab

JLEIC Impedance Status

- We are at the beginning phase of impedance studies
- Engineering analysis and EM modeling are underway
- Best estimates from known impedances and scaling from other rings
  - PEP-II cavities - well characterized
  - Vacuum chamber – scaled from B-Factories
  - IR – studies just starting
  - Crab cavities – under development
- Use best available data for modeling, understanding it may change

Longitudinal Coupled Bunch Instability

Rui Li

JLEIC Electron-ring

E [GeV]	3	5	10
$t_{a=1}$ [ms]	2.9	4.0	72.8
$t_{a=2}$ [ms]	31.3	43.5	466
t_E [ms]	187.4	40.5	5.1
V_{RF} [MV]	0.40	2.02	17.87
Cavity Number	1	2	15

JLEIC p-ring

E [GeV]	100
$t_{a=1}$ [ms]	30.7
$t_{a=2}$ [ms]	6.2
V_{RF} [MV]	42.6
Cavity Number	34

Caused By Z^{RW}!

- Need feedback to damp longitudinal quadrupole mode CBI
- Need to consider growth rate for a non-parabolic bunch

- Here the growth times are calculated using ZAP for Z^{RF} +Z^{RW} (assuming even bunch filling).
- Stability is assessed by comparing the growth time with the damping time (~1ms) of state-of-art fast feedback system.
- The combined effects of HOM from both RF and crab will be studied later

Transverse Coupled-Bunch Instability

JLEIC Electron-ring

E [GeV]	3	5	10
$t_{a=0}$ [ms]	1.6	2.7	64
$t_{a=1}$ [ms]	12.8	19.6	39.8
t_y [ms]	375	81	10.1
V_{RF} [MV]	0.40	2.02	17.87
Cavity Number	1	2	15

(assume x=1, Du_b=3e-04)

due to resistive wall impedance (Cu)

Cannot be improved by HOM damping

JLEIC p-ring

E [GeV]	100
$t_{a=0}$ [ms]	24.4
$t_{a=1}$ [ms]	805
t_y [min]	>30
V_{RF} [MV]	42.6
Cavity Number	34

(assume x=1, Du_b=3e-04)

Jefferson Lab

Feedback system specifications

Key questions:

- What feedback kick voltage is needed in each ring, each plane?
  - ~2x PEP-II looks reasonable
- What is the best operating band to choose for each system?
  - Need full 238 MHz bandwidth
- What is the best kicker technology?
  - Damped cavity longitudinal, high-power striplines transverse
- How many total kickers are needed?
  - TBD

Pathways to answers:

- Compare with existing machines like B-Factories, LHC, RHIC, JPARC
- Contract with industry (Dimitel Inc.) for high-level system architecture
- Take advantage of new kicker designs like APS and DAPHNE

Longitudinal feedback

- PEP-II feedback systems allowed running above threshold. Similar systems are now commercially available
- System will be coupled to main RF for low modes
- Reliable high-power **kickers** are needed

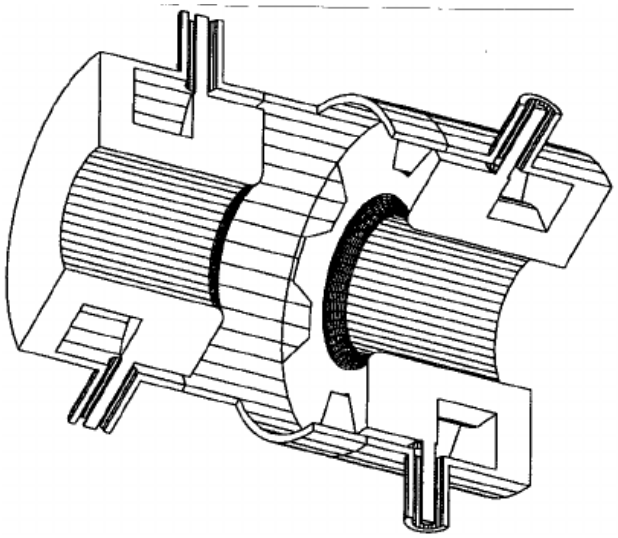

DAPHNE type kicker

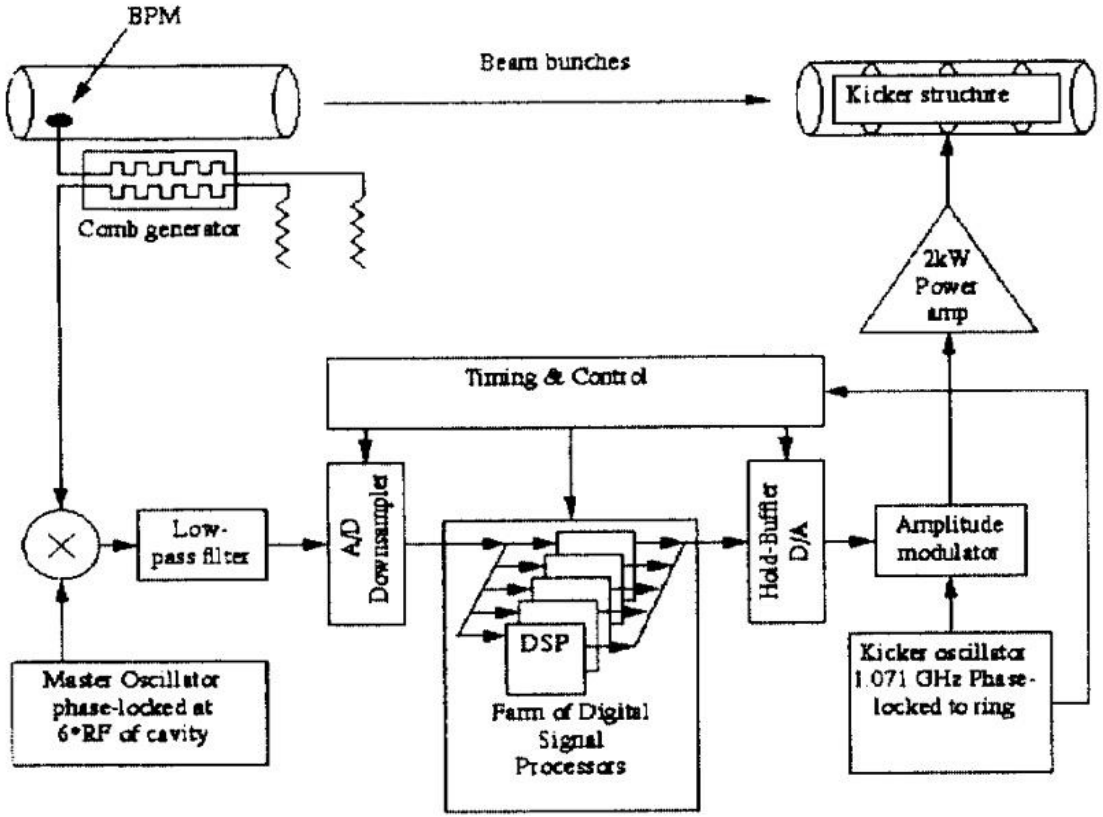

PEP-II Longitudinal Feedback system concept

Transverse feedback

- PEP-II feedback systems allowed running above threshold. Similar systems are now commercially available
- Initial kickers had problems with feedthroughs and overheating
- Reliable high-power **kickers** are needed (e.g. APS type) – FY18 FOA award to ANL

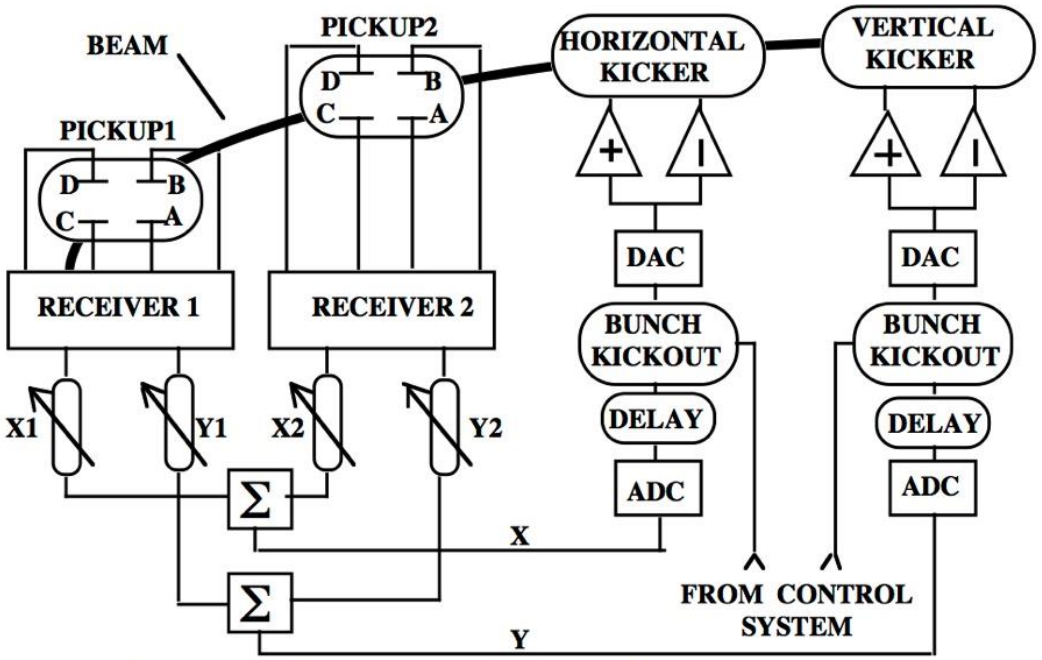

Transverse feedback system concept.

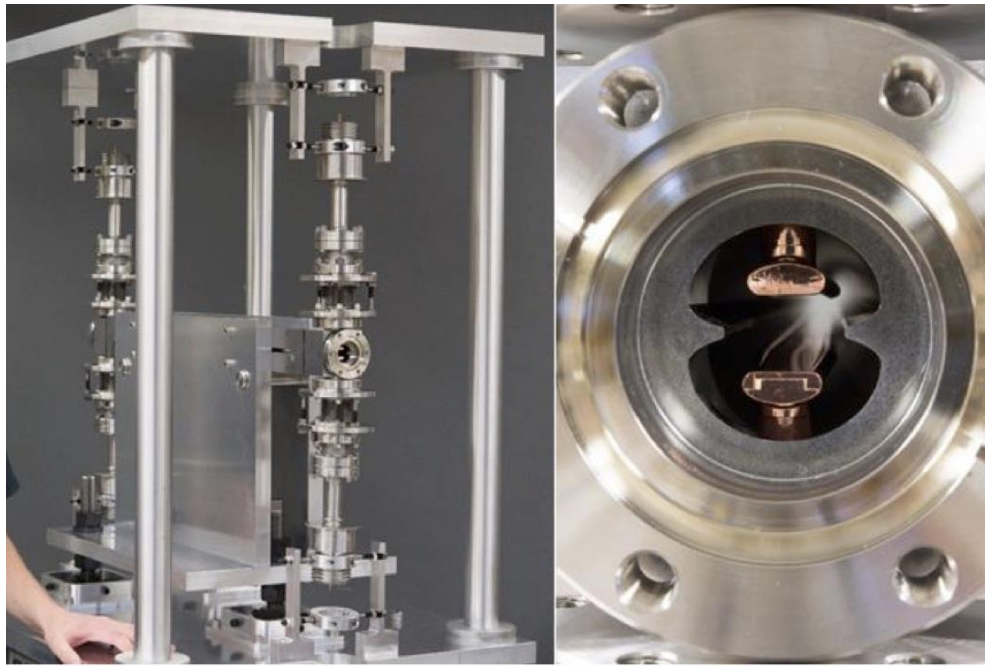

APS type transverse kicker

Conclusions and future work

- Preliminary estimates of ring impedances have been made
- Growth rates confirm the necessity of feedback systems
- Predicted parameters are similar to existing machines
- New kicker technologies in light sources and colliders can be adapted to JLEIC

Path forward

- Industry will be used to provide high level electronic design (subcontract to Dimitel Inc.)
- ANL will develop kicker designs based on APS (Z. Conway)
- Impedance model will be continuously updated
- Final specifications and system design will be ready for CDR.

Thank you!

Growth Rate Estimation

- Zotter's formula

Growth Rate: $\tau_{\mu,a}^{-1} = \mathrm{Im}(\Delta\omega_{\mu,a})$

(assumes even bunch fill pattern)

Longitudinal Coupled Bunch Instability (LCBI)

Frequency shift:

$$\Delta\omega_{\mu,a}^{\parallel} = i\frac{a}{a+1}\frac{q_i I_b \omega_0^2 \eta}{3(L/2\pi R)^3 2\pi\beta^2 (E_T/e)\omega_s}\left[\frac{Z_\parallel}{n}\right]_{\mathrm{eff}}^{\mu,a}$$

Effective impedance:

$$\left[\frac{Z_\parallel}{n}\right]_{\mathrm{eff}}^{\mu,a} = \sum_{p=-\infty}^{\infty}\frac{Z_\parallel(\omega_p'')}{\left(\omega_p''/\omega_0\right)}\frac{h_a(\omega_p'')}{S_a(\omega_p'')}, \quad \text{for} \quad \omega_p'' = pk_b + \mu + a\nu_s$$

Transverse Coupled Bunch Instability (TCBI)

Frequency shift:

$$\Delta\omega_{\mu,a}^{\perp} = -i\frac{1}{a+1}\frac{q_i I_b b c^2}{2\omega_b (E_T/e)L}\left[Z_\perp\right]_{\mathrm{eff}}^{\mu,a}$$

Effective impedance:

$$\left[Z_\perp\right]_{\mathrm{eff}}^{\mu,a} = \sum_{p=-\infty}^{\infty} Z_\perp(\omega_p^\perp)\frac{h_a(\omega_p^\perp - \omega_x)}{S_a\left(\omega_p^\perp - \omega_x\right)}, \quad \text{for} \quad \omega_p^\perp = pk_b + \mu + \nu_\perp + a\nu_s$$

Impedance Measurement vs. Calculation

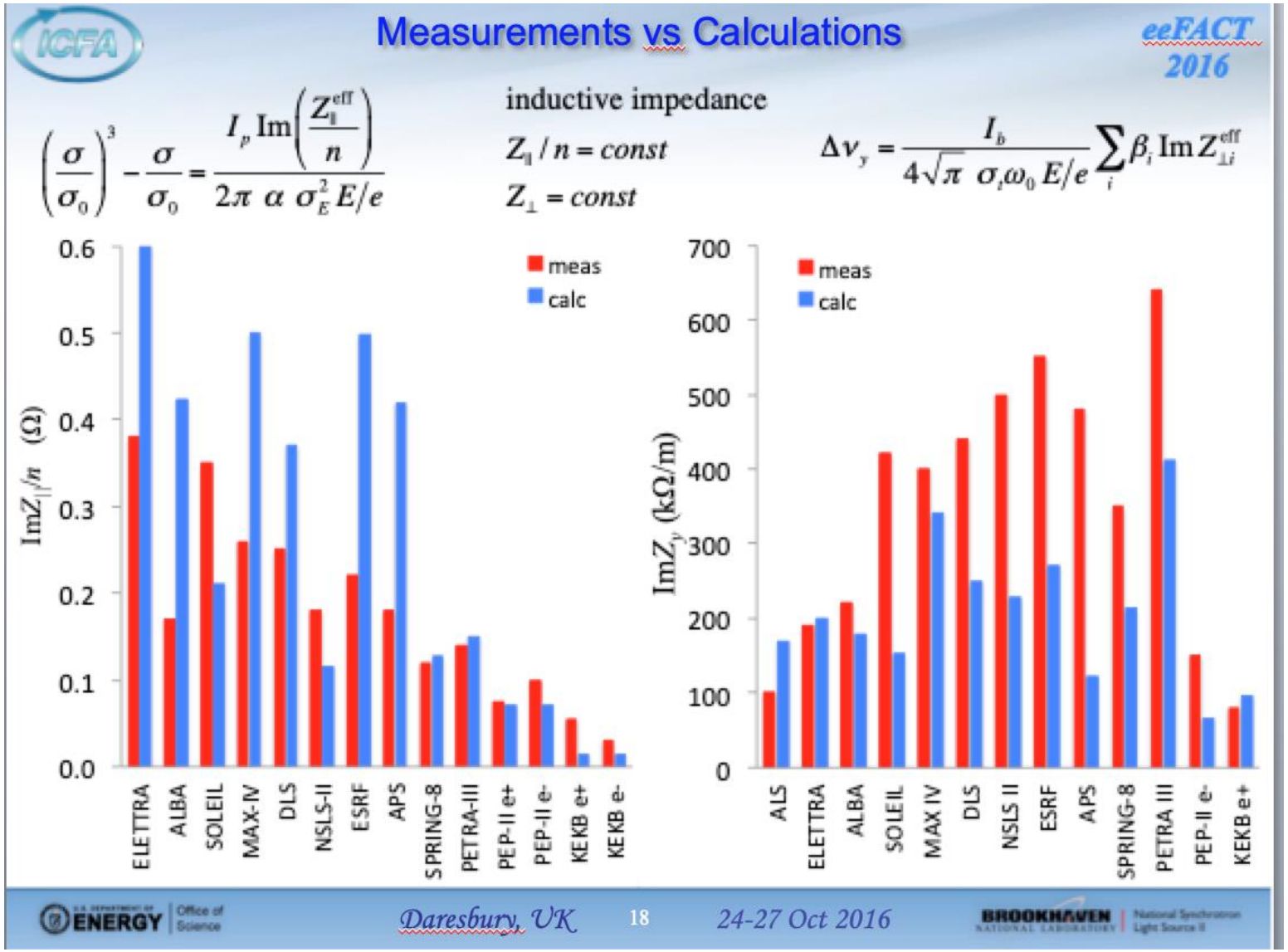

(V. Smaluk, eeFACT2016)

Broadband Impedance Estimation: JLEIC e-Ring

- Component Counts (T. Michalski)

Elements	e-Ring
Flanges (pairs)	1215
BPMs	405
Vacuum ports	480
Bellows	480
Vacuum Valves	23
Tapers	6
Collimators	16
DIP screen slots	470
Crab cavities	2
RF cavities	32
RF valves	68
Feedback kickers	2
IR chamber	1

- Impedance Estimation (K. Deitrick)

Broadband Impedance	Reference: PEP-II	Reference: SUPERKEKB	
L [nH]	99.2	28.6	
$\lvert Z_{\parallel}/n \rvert$ [Ω]	0.09	0.02	$\leq$ 0.1 W
$k_{\parallel}$ [V/pC]	7.7	19	
$\lvert Z_{\wedge} \rvert$ [kW/m]	60	13	$\leq$ 0.1 MW

- JLEIC plans to use PEP-II vacuum systems
- Effective impedance is bunch length dependent

Broadband Impedance Estimation: JLEIC ion-Ring

- Component Counts (T. Michalski)

Elements	p-Ring
Flanges (pairs)	234
BPMs	214
Vacuum ports	92
Bellows	559
Vacuum Valves	14
Tapers	6
Collimators	16
DIP screen slots	-
Crab cavities	8
RF cavities	40
RF cavity bellows	40
RF valves	24
Feedback kickers	2
IR chamber	1

- Impedance Estimation (K. Deitrick)

Broadband Impedance	Reference: PEP-II	
L [nH]	97.6	
$\lvert Z_{\parallel}/n \rvert$ [Ω]	0.08	$\leq$ 0.1 W
$k_{\parallel}$ [V/pC]	8.6	
$\lvert Z_{\wedge} \rvert$ [kW/m]	80	$\leq$ 0.1 MW

- The short bunch length (1.0cm) at collision is unprecedented for the ion beams in existing ion rings
- Bunch length varies through the whole bunch formation process

Jefferson Lab