TJNAF – Interaction Region (IR) Magnet Design Verification

Tim Michalski

Jefferson Lab

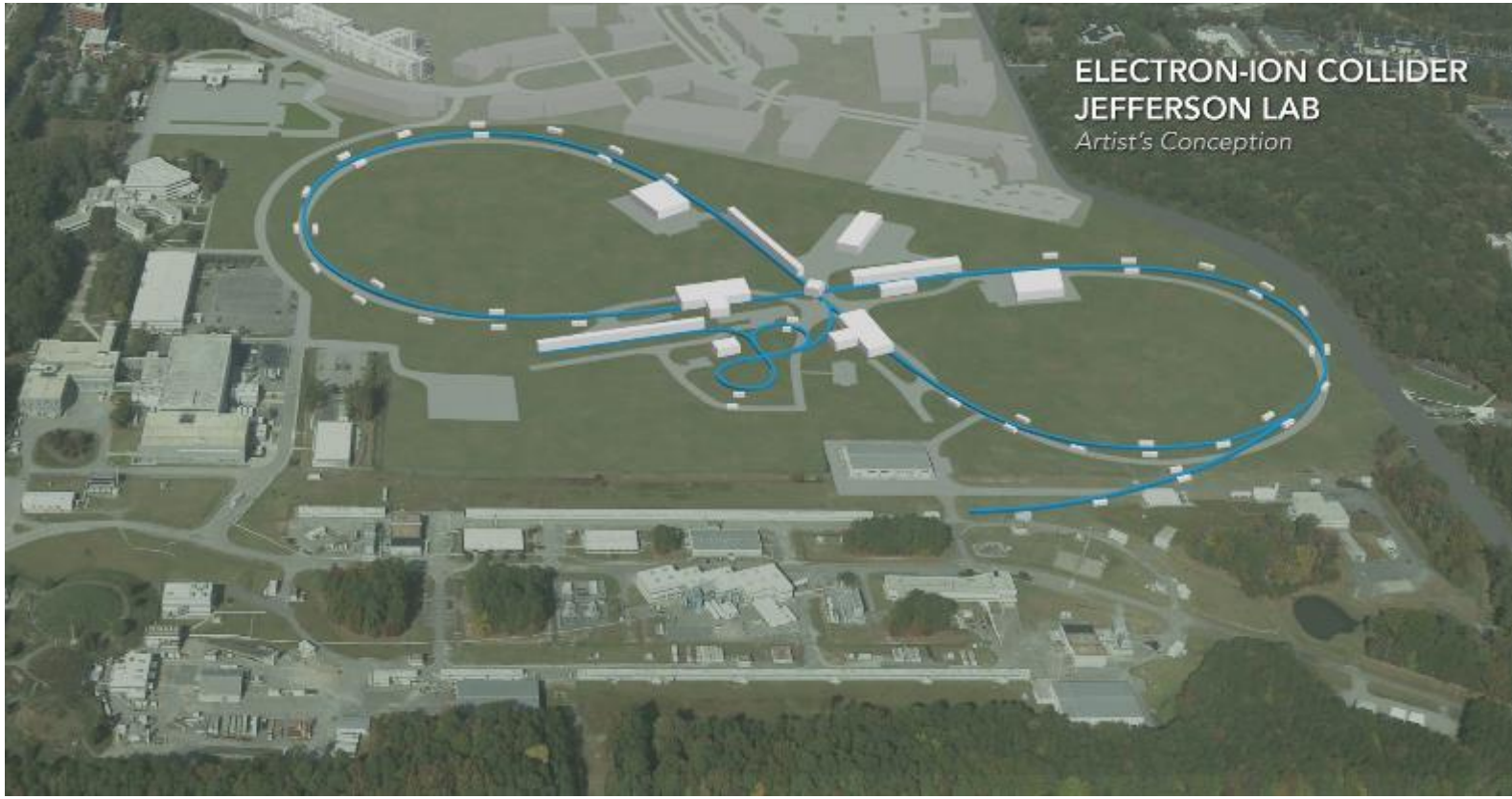

2018 Accelerator R&D PI Exchange Meeting

November 14, 2018

Jefferson Lab

U.S. DEPARTMENT OF ENERGY | Office of Science

JSA

TJNAF – Interaction Region (IR) Magnet Design Verification

- **Description**
  - There are 12 Final Focus Quadrupole (FFQ) and 2 Spectrometer Dipole (SD) high field, large aperture superconducting magnets located within the JLEIC interaction region.
  - Baseline parameters have been defined.
  - Modeling, simulation, and 3D layouts are required to verify designs which satisfy sound magnet design, beam transport and beam physics requirements, and detector background requirements.
- **Status**
  - Complete for this funding period.
- **Main Goal**
  - Develop valid magnet designs for a high acceptance JLEIC Interaction Region.
- **Funding**
  - Base funding for FY'17
  - FY 2018 NP Accelerator R&D FOA – Approved for FY'18/FY'19 – Base redirect
    - "Validation of EIC IR Magnet Parameters and Requirements Using Existing Magnet Results"
- **Budget**

	FY 2017	FY 20XX	FY 20XX
a) Funds allocated	$XXXk		
b) Actual costs to date	$XXXk		

TJNAF – Interaction Region (IR) Magnet Design Verification

- **Milestones**

Milestone	Schedule	Status
Create 3D TOSCA Models of all FFQ Magnets	August, 2018	COMPLETE
Create 3D mechanical layout of the Interaction Region (IR)	August, 2018	COMPLETE
Evaluate interactions between IR magnets	August, 2018	COMPLETE
Evaluate structural supports and cryostats for IR magnets	August, 2018	COMPLETE

- **Jones Report Ranking**

Row No.	Proponent	Concept / Proponent Identifier	Title of R&D Element	Panel Priority	Panel Sub-Priority
1	PANEL	ALL	Crab cavity operation in a hadron ring	High	A
2	PANEL	ALL	High current single-pass ERL for hadron cooling	High	A
3	PANEL	ALL	Strong hadron cooling	High	A
4	PANEL	ALL	Benchmarking of realist EIC simulation tools against available data	High	A
5	PANEL	ALL	Validation of magnet designs associated with high-acceptance interaction points by prototyping	High	A
6	PANEL	ALL	Polarized ^{3}He Source	High	A
7	PANEL	LR	High current polarized and unpolarized electron	High	B

What part of JLEIC are we looking at?

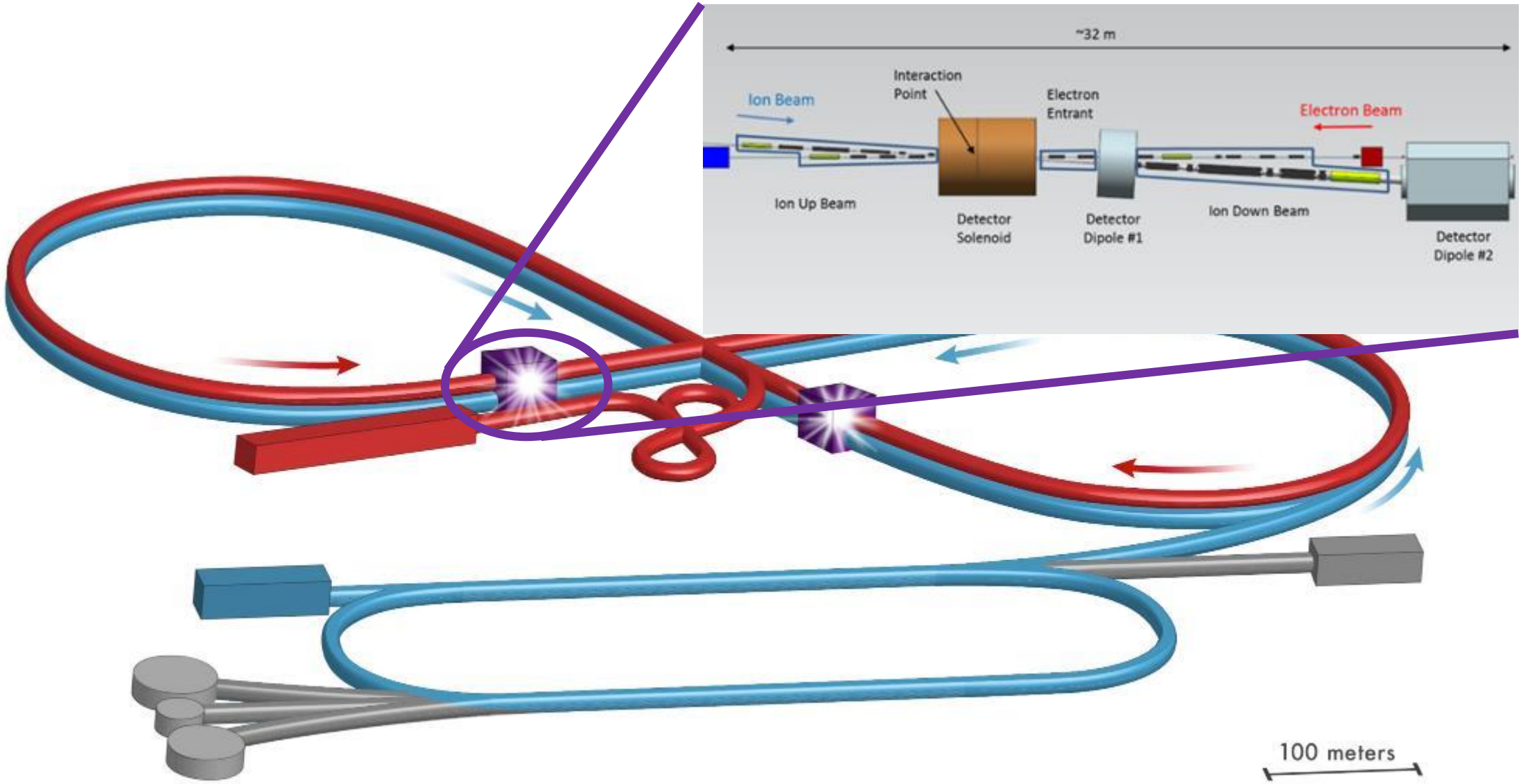

Outline

- Interaction Region Overview Layout
- Magnet Design
- Magnet Optimization
- Magnet-Magnet Interactions
- Beam Transport Area and Cryostat Designs
- Summary and Outlook

Interaction Region (IR) Overview Layout

- The design thus far considered six distinct areas of magnets
  1. Detector Solenoid (4 m)
  2. SB1 dipole (1.5 m)
  3. SB2 dipole (~4.6 m)
  4. Ion entrant side cryostat (~8.7 m)
  5. Electron entrant cryostat, between the Detector Solenoid and SB1 (~2.6 m)
  6. Ion down beam cryostat between the two spectrometer dipoles (~10.4 m)
- This talk will focus on the three beam transport sections, 4-6

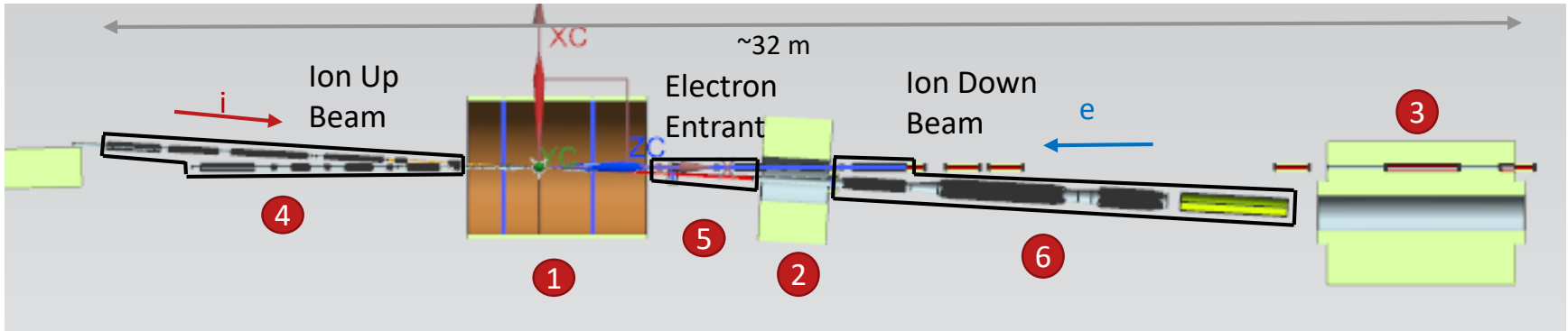

Magnet Design – Ion Magnet Parameters

- All 6 QFFB magnets require Nb3Sn due to peak field
- 3 downstream magnets are most challenging due to aperture size
- Each FFQ has a corresponding skew quadrupole. FFQ fields are too high to allow nesting in the three down beam quadrupoles.

		Requirements					Design				
Magnet Location	Magnet Type	Magnet Strength (T, T/m, T/m^2)	Magnetic length (m)	Good field region radius (cm)	Inner Radius (cm)	Outer radius (cm)	Inner radius (mm)	Coil inner radius (mm)	Coil width in radial direction (mm)	Coil outer radius (mm)	Peak field from VF (T)
Interaction Region (IR) Ion Quadrupole	QFFB3_US	-116	1	3	4	12	40	45.0	18	63.0	8.93
	QFFUS03S ***	-9.9	1		4	12	40	67.0	2	69.0	0.22
	QFFB2_US *	149	1.5	3	4	12	40	45.0	30	75.0	8.0
	QFFUS02S ***	5.30	1.5		4	12	40	77.0	2	79.0	0.2
	QFFB1_US	-141	1.2	2	3	10	30	34.5	18	52.5	7.9
	QFFUS01S ***	-14.4	1.2		3	10	30	57.0	2	59.0	0.24
	QFFDS01S	8.6	0.1		8.5	17.1	85	90.8	10	100.8	1.6
	QFFB1 **	-88	1.2	4	8.5	17.1	85	90.8	43.6	134.4	11.5
	QFFDS02S ***	-3.7	0.1		12.6	24.7	126	133.4	10.0	143.4	1.8
	QFFB2 **	51	2.4	4	12.6	24.7	126	133.4	45.0	178.4	10.3
	QFFDS22S ***	-5.5	0.1		12.6	24.7	126	133.4	10.0	143.4	1.8
	QFFB3	-35	1.2	4	14.8	26.7	148	155.0	38.0	193.0	8.5
	QFFDS03S ***	4	0.1		14.8	26.7	148	155	10	165.0	1.84

*	First Order Electromagnetic Optimization done and optimized design presented in rest of the paper
**	First Order Electromagnetic Optimization done and optimized design presented in a separate section, magnet interaction is done without optimized design
***	The peak field values are just for the skew quad alone, this value is higher when operated with the main quad

Magnet Design – Electron Magnet Parameters

		Requirements					Design				
Magnet Location	Magnet Type	Magnet Strength (T, T/m, T/m^2)	Magnetic length (m)	Good field region radius (cm)	Inner Radius (cm)	Outer radius (cm)	Inner radius (mm)	Coil inner radius (mm)	Coil width in radial direction (mm)	Coil outer radius (mm)	Peak field from VF (T)
Interaction Region Electron Quadrupole	Common Quad design,combined with Skew Quads	**Quad **** **45** (varies from 13.63 to 44.78)	0.6	3.2	4.5	8	45	49.5	10	59.5	3.51
		Skew-Quad *** **9.5** (varies from 1.97 to 9.3)	0.6	3.2	4.5	8	45	61.5	3.25	64.8	1.248
Electron IR Solenoid	AASOLEUS	6	1.2		4		40	60	20	80.0	6
	AASOLEDS	6	1.2		4		40	60	20	80.0	6
ION IR Solenoid	AASOLEUS	6	1.2		4		40	60	20	80.0	6
	AASOLEDS	3.6	2		17		170	190	12	202.0	3.614
Corrector	IPUSCORR1	-0.14 By -0.95 Bx	.2					34.5 50	9 3	43.5 53	3.06 in X coil 1.36 in Y coil (Both coils On)
	IPUSCORR2	0.15 By 1.55 Bx	.2								

*	First Order Electromagnetic Optimization done and optimized design presented in rest of the paper
**	First Order Electromagnetic Optimization done and optimized design presented in a separate section, magnet interaction is done without optimized design
***	The peak field values are just for the skew quad alone, this value is higher when operated with the main quad

Each of the quadrupoles will need a corresponding skew quadrupole.

Magnet Design

- All of the magnets for both the ion and electron beam lines are based on cold bore designs.
- This is primarily to lower the field requirements on the ion beam quadrupoles.
- The magnets in the electron beam line could be either warm or cold bore.
- The cold bore designs in the electron line do reduce the radial space needed which is a plus as you get closer to the IP.
- Expectation is to use existing, proven conductor – LARP for Nb3Sn, Standard Rutherford cable for NbTi

Magnet Design – Electron and Ion Upstream Quad

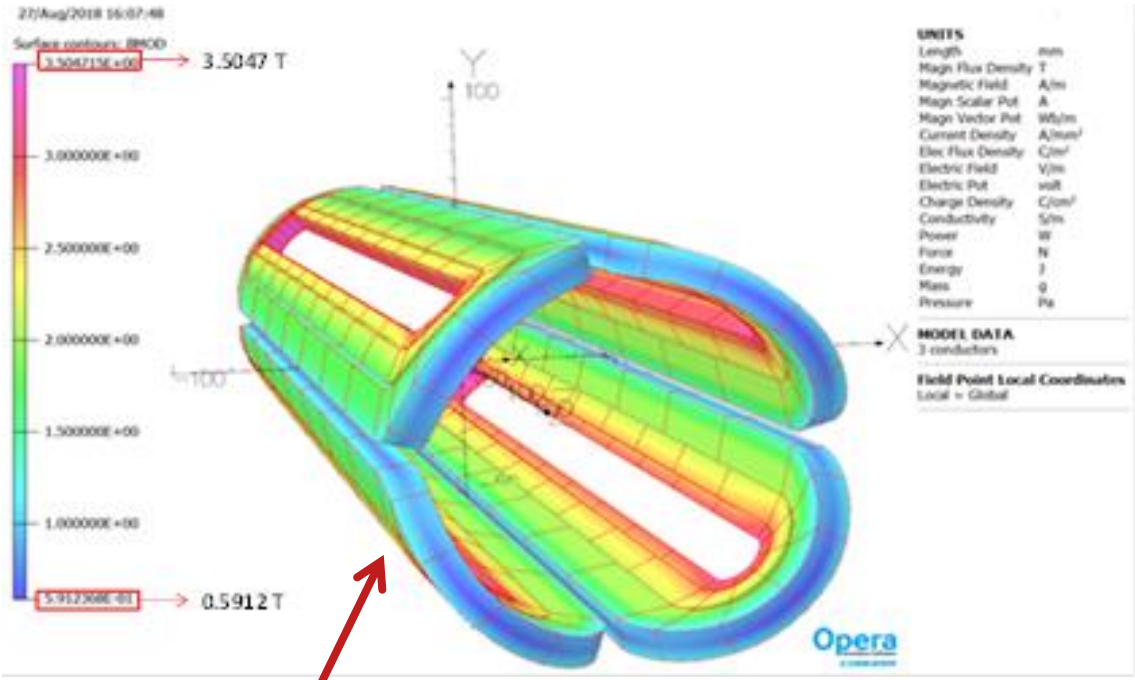

Peak Field in Electron Quad
The coils will be operated at 4000 A and will use 9.73 mm x 1.2 mm Rutherford cable.

Peak Field in Upstream Ion Quad (QFFB2_US) The conductor is envisaged to be stranded, Nb_3Sn cable with 20-30 strands per cable using 0.7 mm diameter strands. This type of Nb_3Sn conductor is also being used for the LARP magnets.

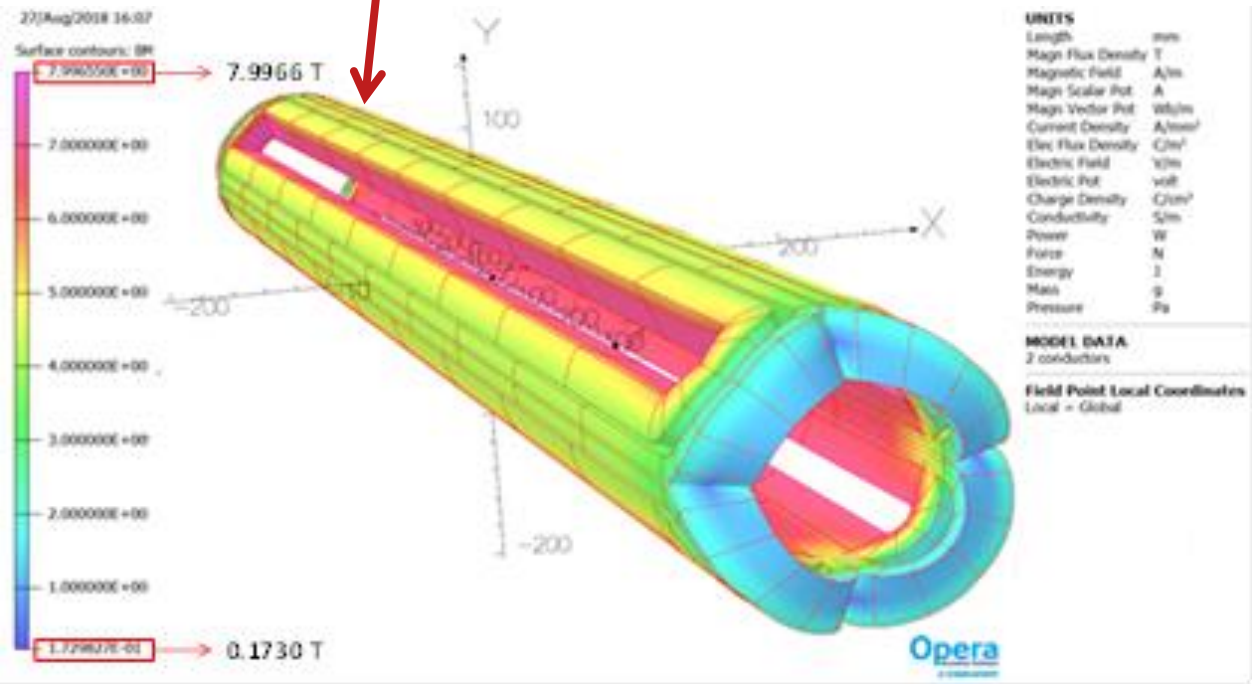

Jefferson Lab

Magnet Design – Ion Downstream Quad

Coil field in QFFB2 Before Optimization

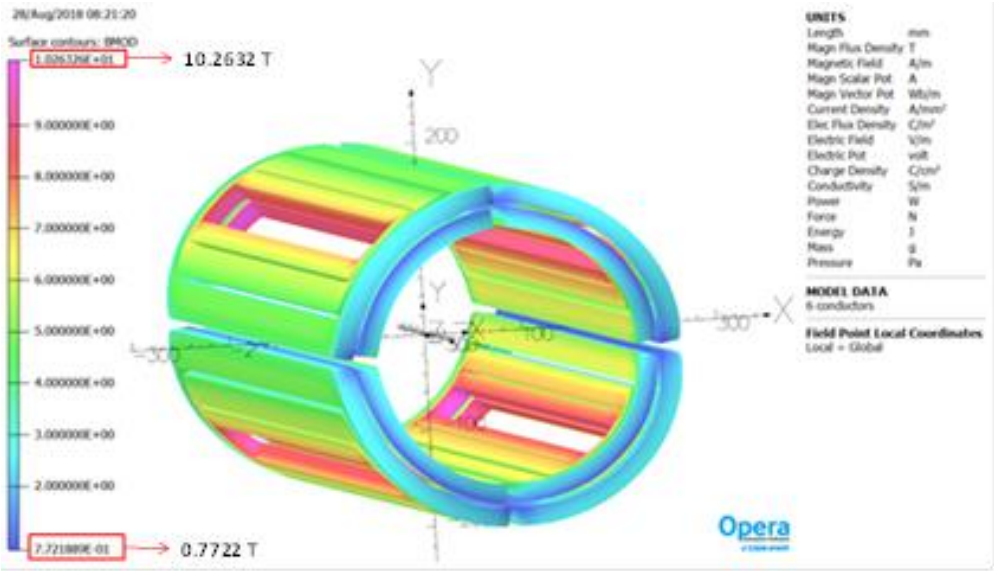

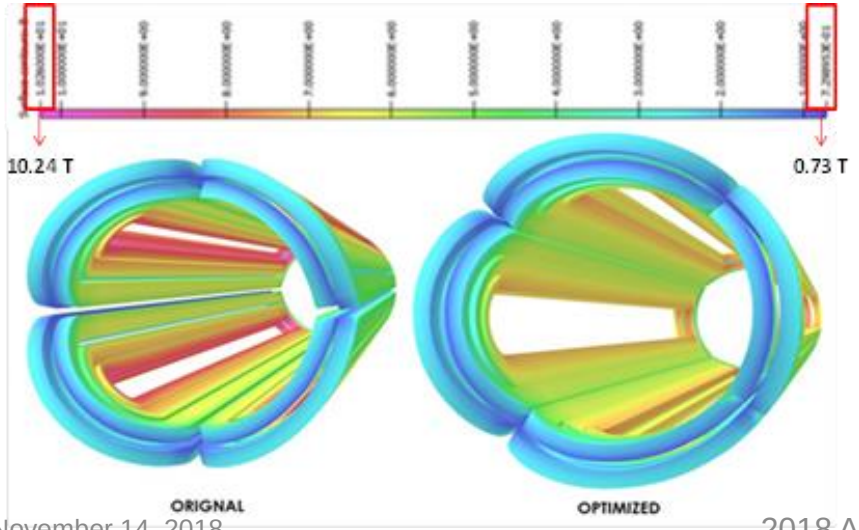

Von-Mises Stress in QFFB2 Before Optimization

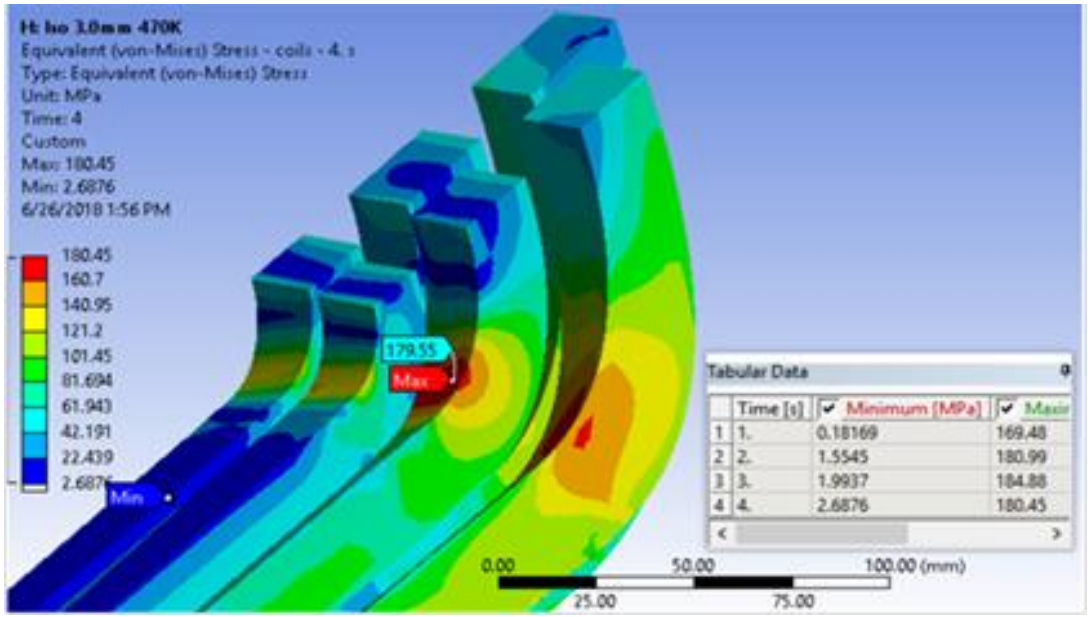

Max Compression Stress	TEMP (K)	MQXF (MPa)	QFFB2 (MPa)
Before cool-down	293	-125	-169
After cool-down	4.2	-192	-185
With Lorentz force	4.2	-146	-180

First Order Optimization brings the peak coil field down from 10.3 T to 8.8 T.

Magnet Design – Skew Quad, Solenoid, Corrector Magnet

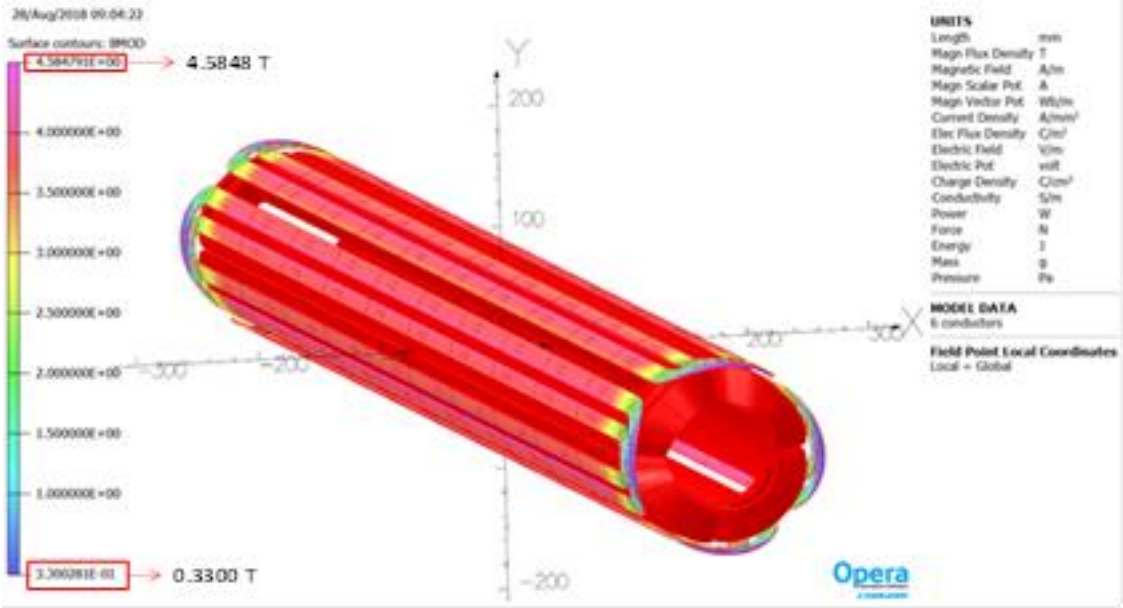

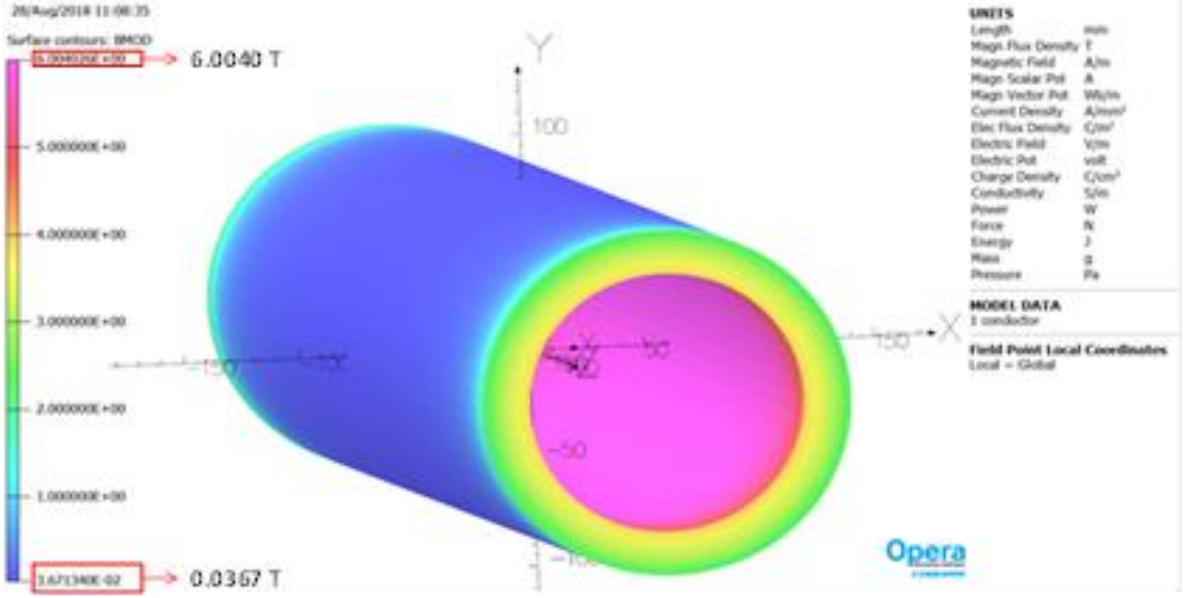

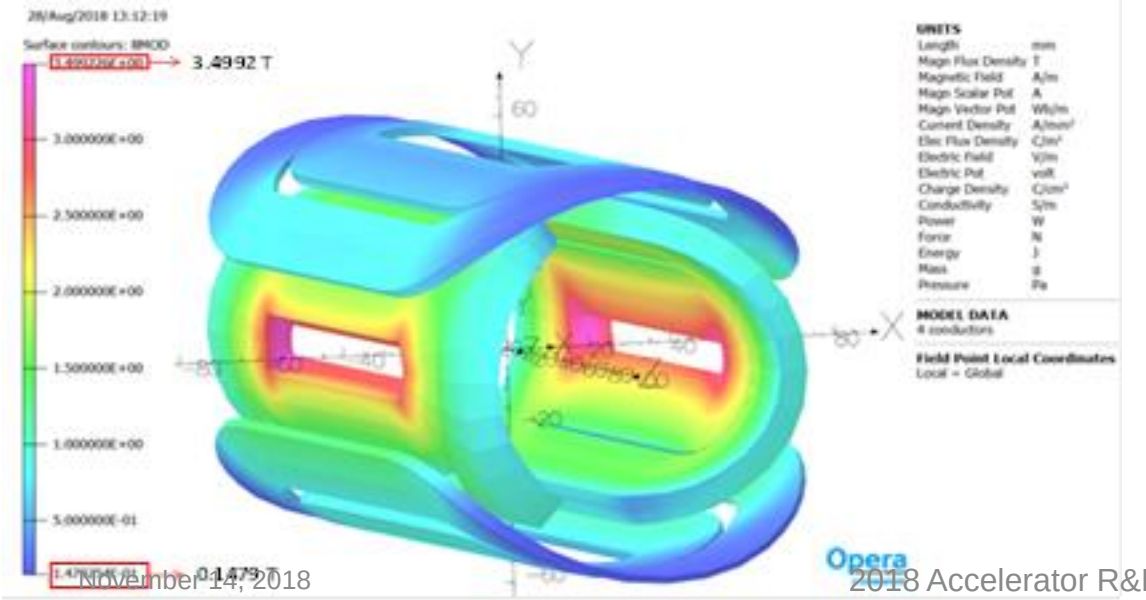

- Peak field in Skew quad is 4.6 T(this will change after optimization)
- Peak Field in the Solenoid is 6T (this will change after including the shielding)
- Peak Field in the Corrector is 3.5 T (this will change after finalizing the specification and conductor)

Magnet-Magnet Interaction

- In order to study the magnet-magnet interactions, the following combinations were selected for the initial study:
  - **QFFUS1 with Ion beam line**
  - QFFB2 with electron beam line

QFFUS1- (i) ion beam tube wrapped with 5 mm mild steel passive shield (ii) the vacuum vessel for the QFFUS1 is assumed to be made of mild steel, and (iii) a combination of the above two options

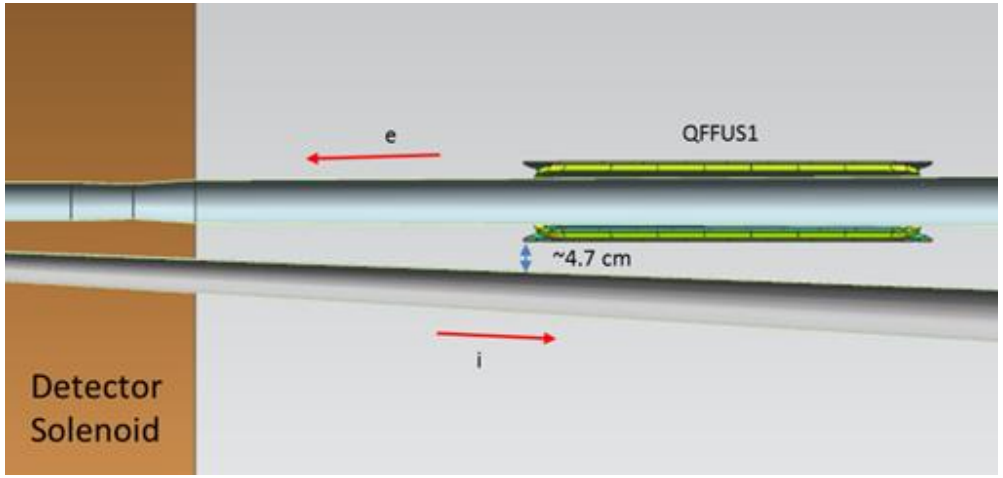

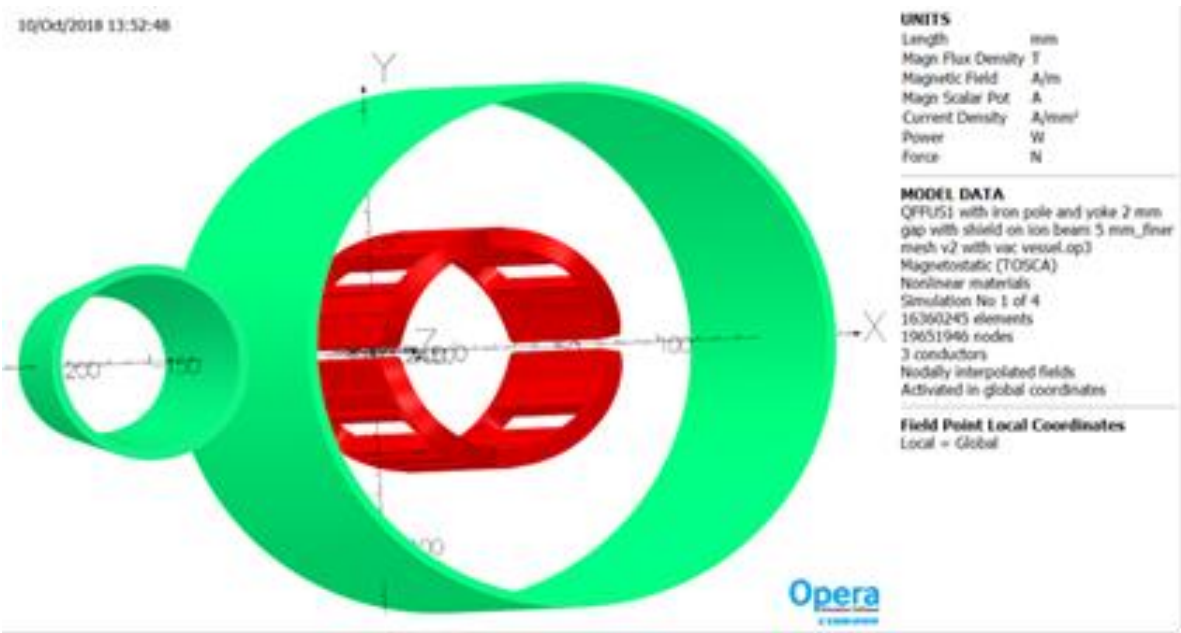

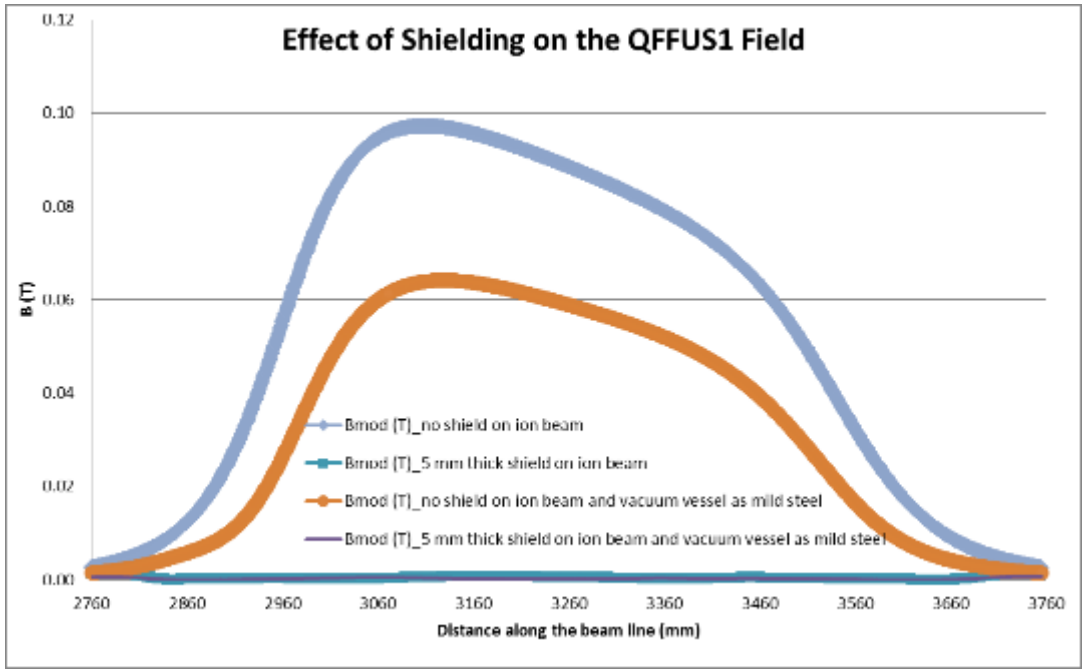

Magnet-Magnet Interaction

- In order to study the magnet-magnet interactions, the following combinations were selected for the initial study:
  - QFFUS1 with Ion beam line
  - **QFFB2 with electron beam line**

QFFB2- This magnet is simulated with return yoke thicknesses of 200 mm and 250 mm around the magnet, active shield around the magnet, a combination of iron yoke and an active shield coil

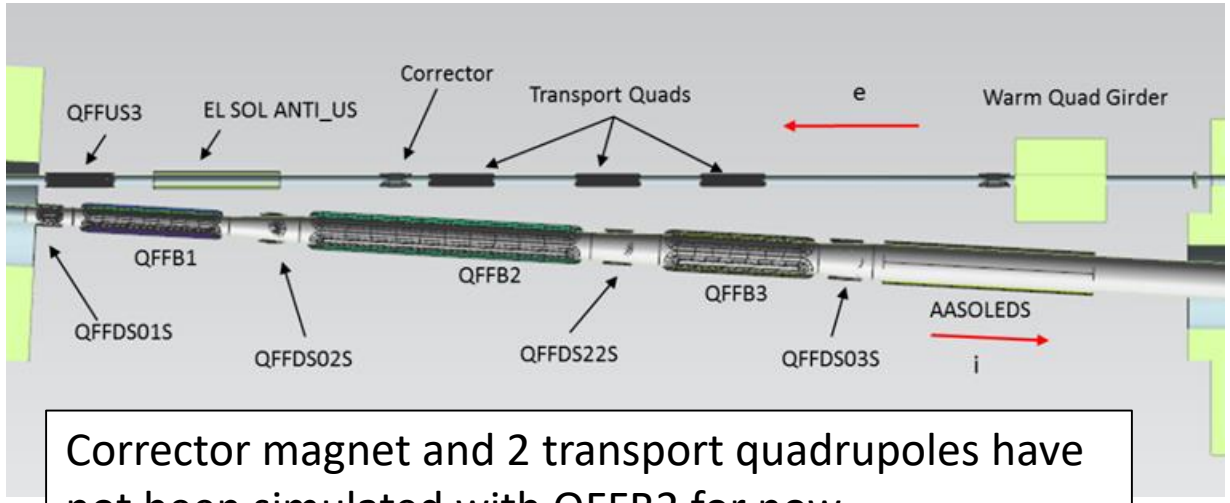

Corrector magnet and 2 transport quadrupoles have not been simulated with QFFB2 for now

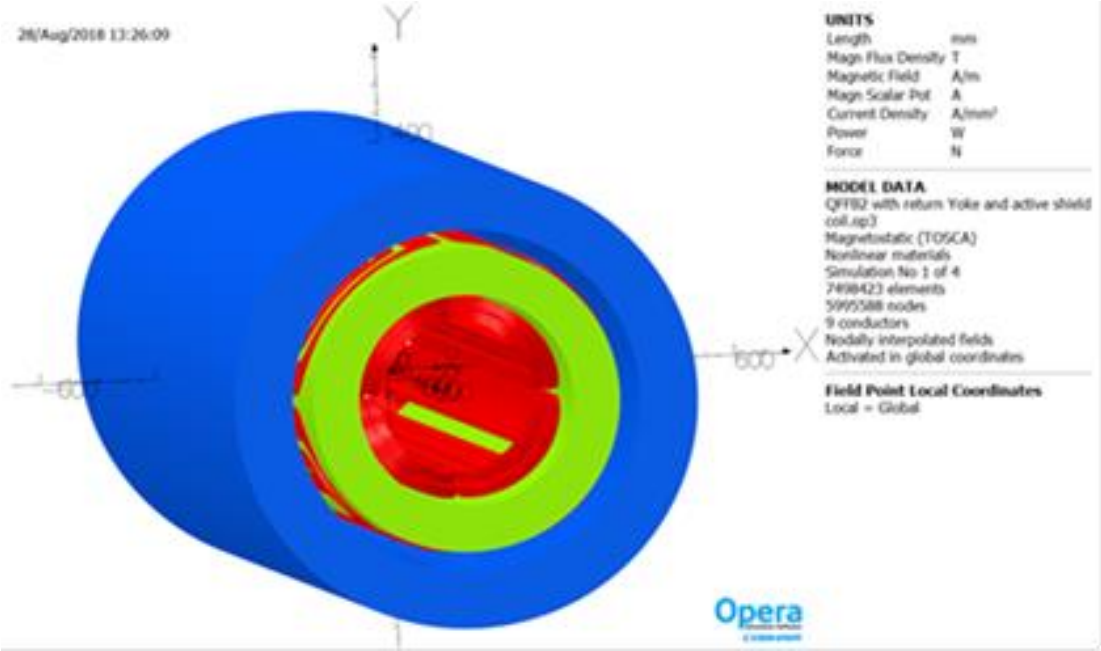

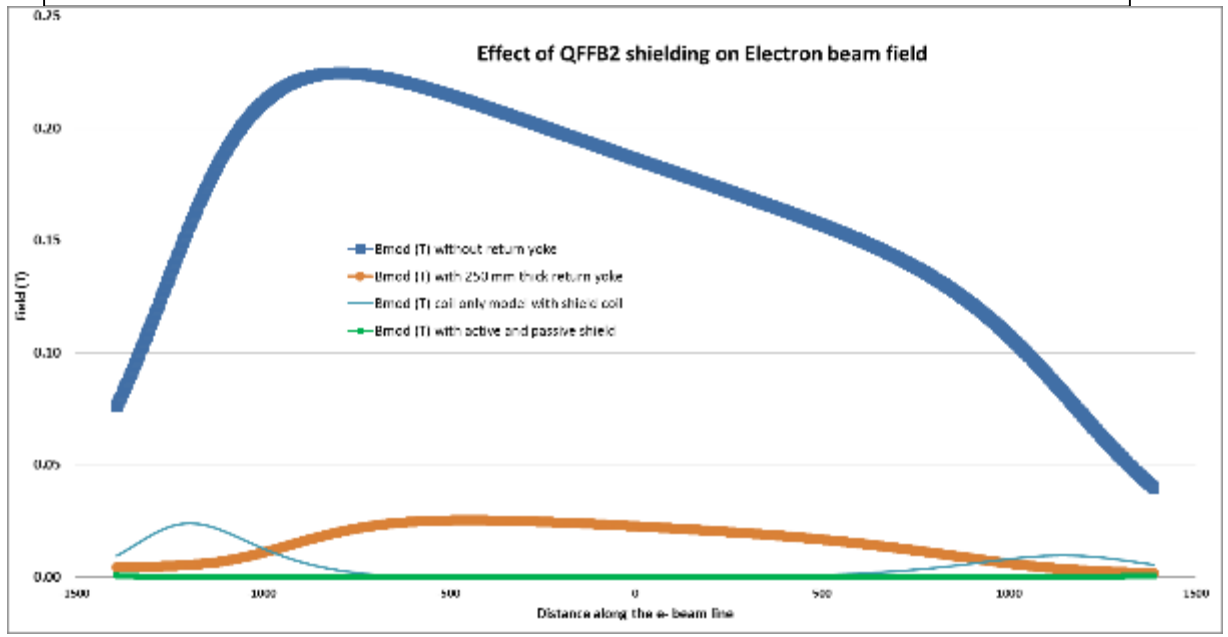

Ion Up Beam Area

- 'Z' spacing of the magnets
  - Reserve 10 cm on each magnet end for field optimization, coil clamps, etc.
  - Reserve 30 cm for a warm to cold transition and 10 cm for a bellows at the end of the cryostats
- Eighteen plus multipole correctors and shielding coils in a single ~8.7 m long cryostat
  - Three identical quads in electron line with nested skew quads
  - Three quads in ion line with nested skew quads
  - 1.2 m solenoid in each line (same design)
  - Two horizontal/vertical correctors in ion line near IP
- Both the cryostat and cold mass will be supported in at least three locations with a minimum of twelve typical support rods on the cold mass.
- A thermal shield will be included inside of the vacuum vessel and surround the entire cold mass.
- The cryogenic feed and magnet lead can will be positioned on one side of the cryostat away from the detector elements.

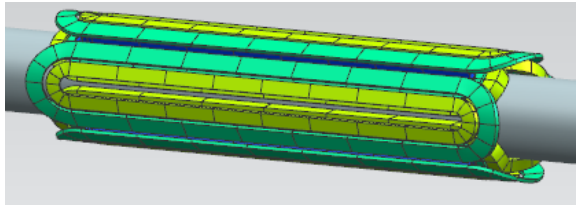

Quad with nested skew quad

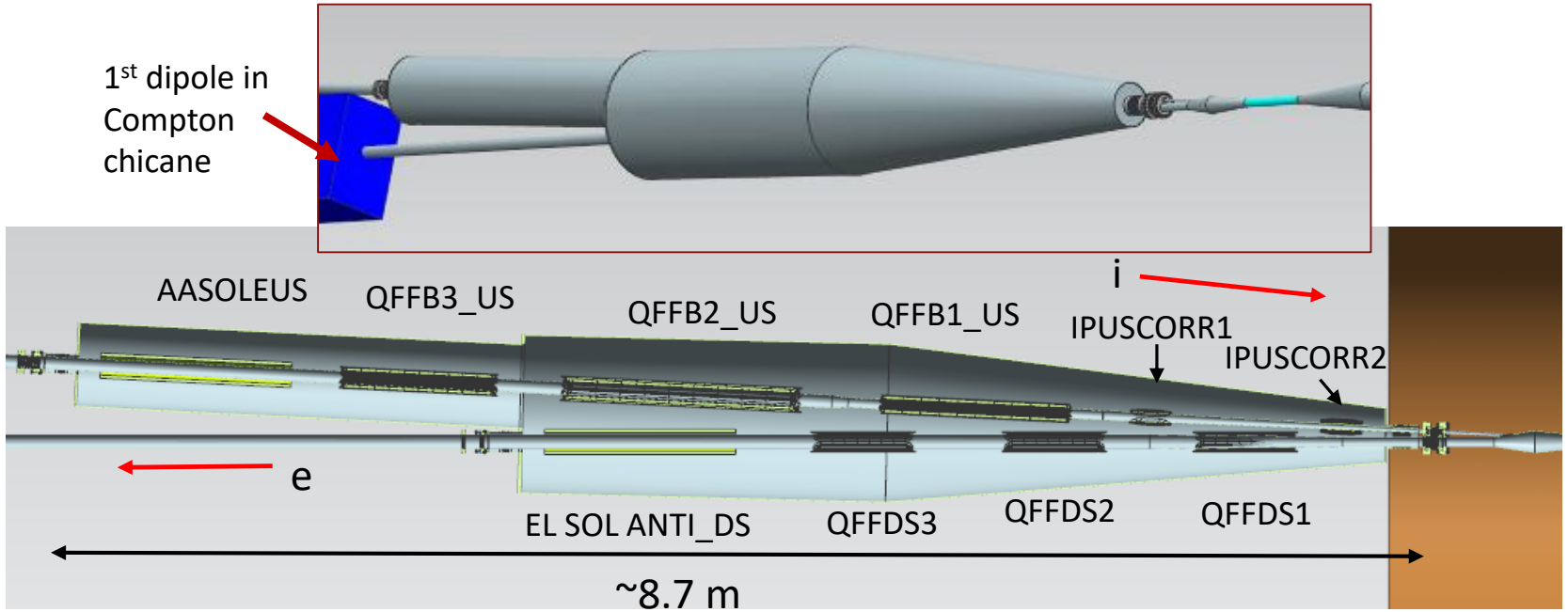

Electron Entrant Area

- Four magnets plus shield coils in a ~2.6 m long cryostat
- The cryostat will be tapered near the IP to avoid interference with the ion vacuum beam line and to allow for the maximum acceptance angle for the detector elements.
- To avoid interference with the ion beam vacuum line, the vacuum vessel and thermal shield will centered eccentrically from the cold mass.
- The warm to cold transition will extend into the detector dipole on one end and stop just short of the detector solenoid on the other.
- Intercept needed for synchrotron radiation in the electron line
  - We can move the synchrotron intercept outside of the warm to cold transition area
  - The cold bore heat loads appear to be acceptable

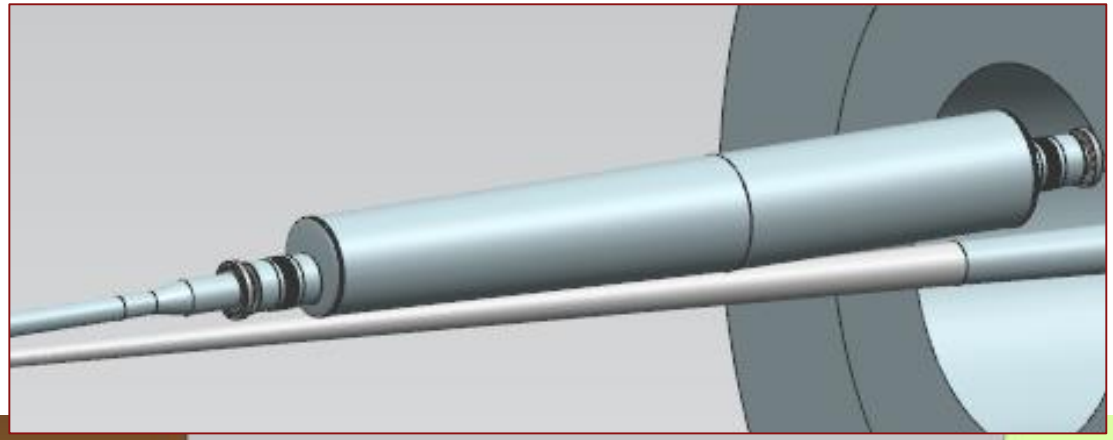

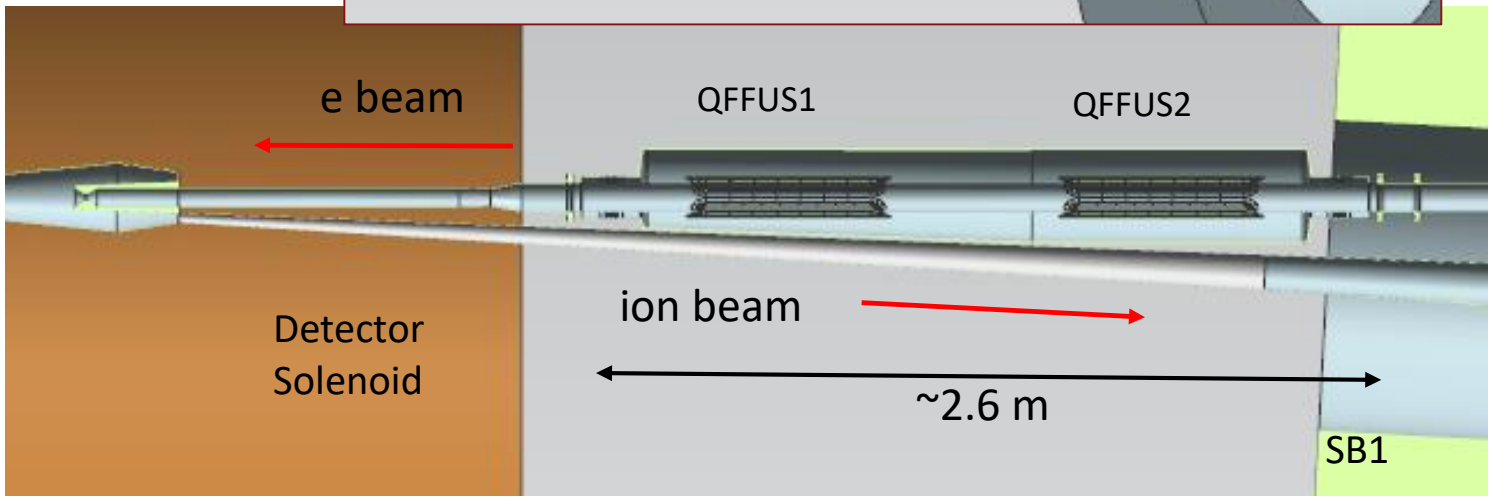

Ion Down Beam Area

Fourteen magnets plus multipole correctors and shield coils in a single ~10.4 m long cryostat

- Transport quads are superconducting as warm magnets impinge on the radial space of the ion beamline – same design as the other electron FFQs
- Three large bore, high strength quads in ion line (QFFB1, 2, 3)
- Large bore solenoid in ion beam line (AASOLEDS)
- Four separate skew quads in ion line – (QFFDS01S, 02S, 22S, 03S)
- Looking at shielding design and magnet support structure near the QFFB2 magnet

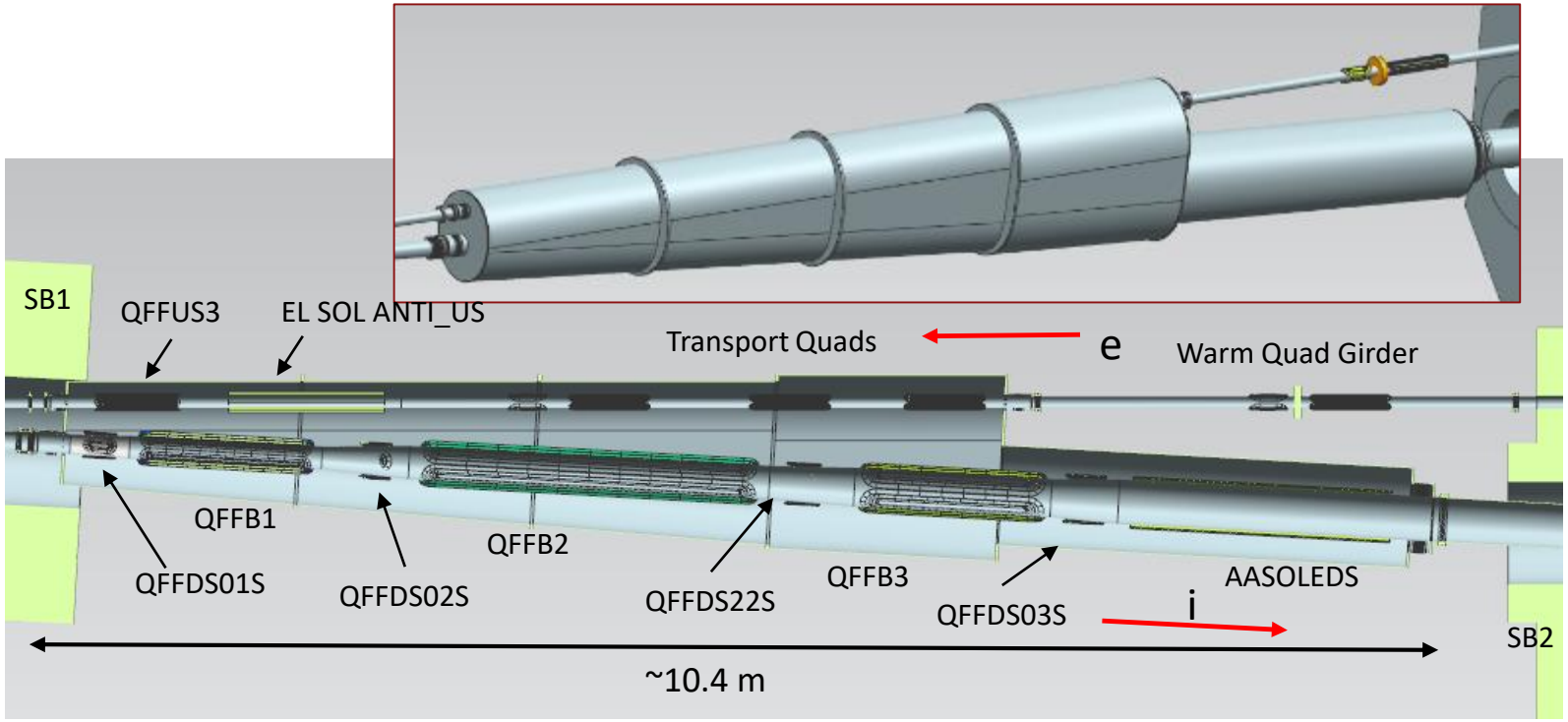

Integration with detector dipole

- Designs of beamlines will be closely coupled to the SB1 spectrometer dipole design
- Two H/V correctors (IPDSCORR1&2) still to be placed in ion beam line
  - Combined dipole/corrector specification and location selection in progress
- In the preliminary designs both cryostat beam lines extended into the SB1
  - This will probably change as we incorporate the new corrector requirements
- Physics detectors are also desired between this magnet bore and the vacuum beam line.
- The adjacent electron beam line will also require shielding from this combined function magnet.

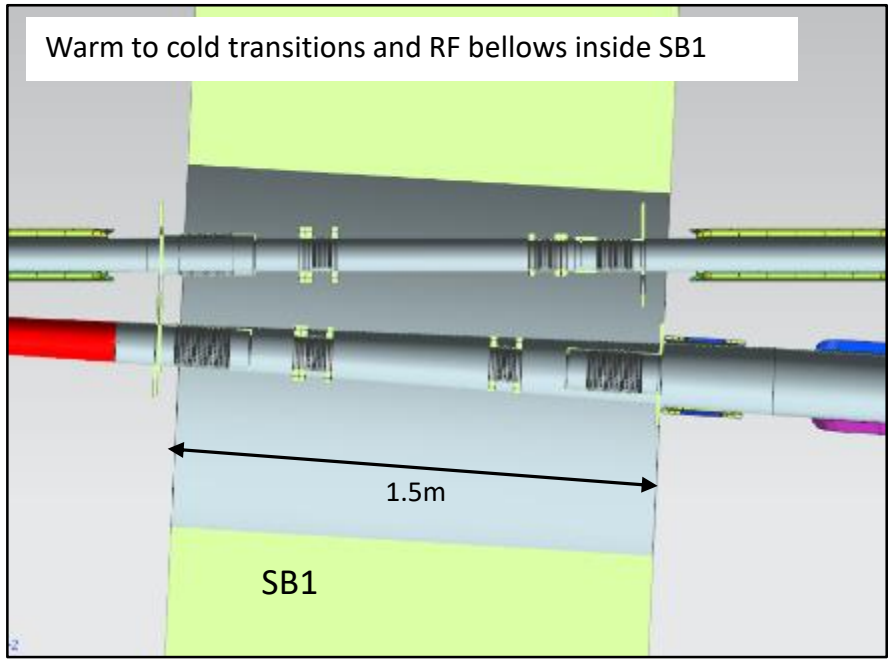

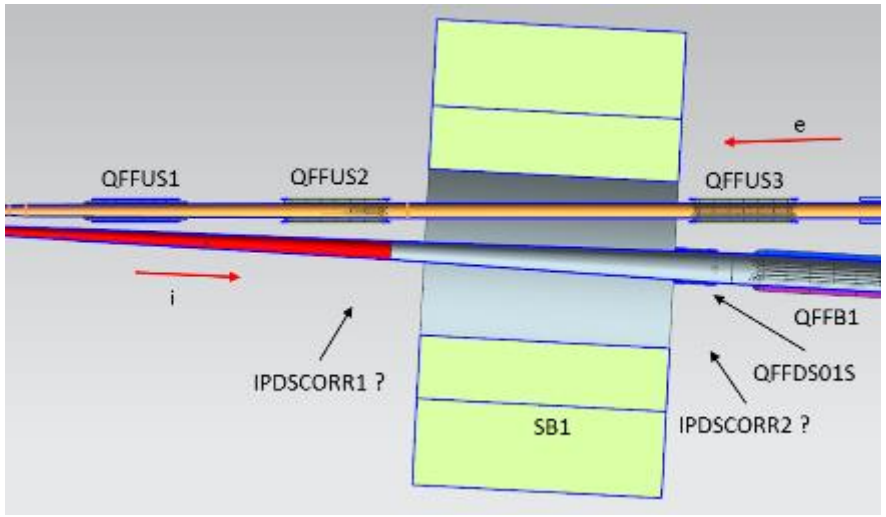

Summary and Outlook

- A thorough first layout and magnet analyses have been performed on all IR magnets.
- Further review of the shielding requirements is underway.
- Cryostat definition is also underway in order to outline space available for detectors.
- Additional cryostat detail is required to insure magnets can be supported, accommodate cooldown, withstand magnetic loads, and integrate into detector space designs
- Continue work on shielded bellows concepts that can be used for beam impedance studies
- Possibly add shielded bellows inside the cryostats to ease assembly and alignment.
- Work on shielded vacuum pump designs that can be used in the area that would be compatible with the physics detectors.
- A separate group is studying the vacuum requirements within the IR needed to limit background noise on the detectors.

- The information presented here is for $\sqrt{s}$ = 65 GeV. Further modifications are required to accommodate $\sqrt{s}$ = 100 GeV. The main alteration will be to double the length of the ion IR quadrupole magnets.

Thank you for your attention.

Are there any questions?